ent, you acknowledge, accept and agree with the Company, its sole sponsor, overall of the underwriting syndicate that:

purpose of providing information about the Company to the public in Hong Kong and not investment decision should be based on the information contained in this document;

ment or any supplemental, revised or replacement pages on the Stock Exchange's website igation of the Company, its sole sponsor, overall coordinators, advisors or members of the oceed with an offering in HongKong or any other jurisdiction. There is no assurance that with the offering;

nt or any supplemental, revised or replacement pages may or may not be replicated in full or ting document;

al listing document and may be updated or revised by the Company from time to time in Governing the Listing of Securities on the Stock Exchange;

stitute a prospectus, offering circular, notice, circular, brochure or advertisement offering to olic in any jurisdiction, nor is it an invitation to the public to make offers to subscribe for or r is it calculated to invite offers by the public to subscribe for or purchase any securities;

regarded as an inducement to subscribe for or purchase any securities, and no such

y of its affiliates, its sole sponsor, overall coordinators, advisors or underwriters is offering, any securities in any jurisdiction through the publication of this document;

ties mentioned in this document should be made by any person nor would such application

ll not register the securities referred to in this document under the United States Securities r any state securities laws of the United States;

ctions on the publication of this document or dissemination of any information contained in o inform yourself about and observe any such restrictions applicable to you; and

s document relates has not been approved for listing and the Stock Exchange and the turn or reject the application for the subject public offering and/or listing.

to the public in Hong Kong until after a prospectus of the Company has been registered in Hong Kong in accordance with the Companies (Winding Up and Miscellaneous 2 of the Laws of Hong Kong). If an offer or an invitation is made to the public in Hong nvestors are reminded to make their investment decisions solely based on the Company's gistrar of Companies in Hong Kong, copies of which will be published to the public during

IMPORTANT: If you are in any doubt about any of the contents of this

Shenzhen Senior Tech

(A joint stock company incorporated in the P

[REDA

Number of [REDACTED] under the [REDACTED]

Number of [REDACTED]
Number of [REDACTED]

[REDACTED]

Nominal value
[REDACTED]

Sole Sponsc

IMPORTANT

[REDACTED]

IMPORTANT

[REDACTED]

EXPECTED TIMETABLE [(1)]

[REDACTED]

EXPECTED TIMETABLE [(1)]

[REDACTED]

EXPECTED TIMETABLE [(1)]

[REDACTED]

EXPECTED TIMETABLE [(1)]

[REDACTED]

CONTENTS

IMPORTANT NOTICE TO PROSPECTIVE [REDACTED]

This document is issued by us solely in connection with the [REDACTED] and the [REDACTED] and does not constitute an [REDACTED] to sell or a solicitation of an [REDACTED] to buy any security other than the [REDACTED] by this document pursuant to the [REDACTED]. This document may not be used for the purpose of making, and does not constitute, an [REDACTED] or invitation in any other jurisdiction or in any other circumstances. No action has been taken to permit a [REDACTED] of the [REDACTED] in any jurisdiction other than Hong Kong, and no action has been taken to permit the distribution of this document in any jurisdiction other than Hong Kong. The distribution of this document for purposes of a [REDACTED] and the [REDACTED] and sale of the [REDACTED] in other jurisdictions are subject to restrictions and may not be made except as permitted under the applicable securities laws of such jurisdictions pursuant to registration with or authorization by the relevant securities regulatory authorities or an exemption therefrom.

You should rely only on the information contained in this document to make your [REDACTED] decision. The [REDACTED] is made solely on the basis of the information contained and the representations made in this document. We have not authorised anyone to provide you with information that is different from what is contained in this document. Any information or representation not contained nor made in this document must not be relied on by you as having been authorised by us, the Sole Sponsor, [REDACTED], any of our or their respective directors, officers, employees, agents, or representatives of any of them or any other parties involved in the [REDACTED]. Information contained in our website, located at www.senior798.com, does not form part of this document.

EXPECTED TIMETABLE iii

CONTENTS vii

SUMMARY 1

DEFINITIONS 22

GLOSSARY OF TECHNICAL TERMS 32

FORWARD-LOOKING STATEMENTS 39

RISK FACTORS 41

INFORMATION ABOUT THIS DOCUMENT AND THE [REDACTED] 73

WAIVERS AND EXEMPTIONS FROM STRICT COMPLIANCE WITH THE LISTING RULES AND THE COMPANIES (WINDING UP AND MISCELLANEOUS PROVISIONS) ORDINANCE 78

DIRECTORS AND PARTIES INVOLVED IN THE [REDACTED] 88

CONTENTS

CORPORATE INFORMATION 93

INDUSTRY OVERVIEW 95

REGULATORY OVERVIEW 112

HISTORY AND CORPORATE STRUCTURE 127

BUSINESS 136

RELATIONSHIP WITH OUR SINGLE LARGEST SHAREHOLDERS 224

CONNECTED TRANSACTIONS 230

DIRECTORS AND SENIOR MANAGEMENT 240

SUBSTANTIAL SHAREHOLDERS 257

SHARE CAPITAL 258

FINANCIAL INFORMATION 261

FUTURE PLANS AND USE OF [REDACTED] 312

[REDACTED] 316

STRUCTURE OF THE [REDACTED] 327

HOW TO APPLY FOR [REDACTED] 340

APPENDIX I — ACCOUNTANTS' REPORT I-1

APPENDIX IIA — UNAUDITED [REDAC TED] FINANCIAL INFORMATION IIA-1

APPENDIX IIB — [REDACTED] IIB-1

APPENDIX III — SUMMARY OF ARTICLES OF ASSOCIATION OF THE COMPANY III-1

APPENDIX IV — STATUTORY AN D GENERAL INFORMATION IV-1

APPENDIX V — DOCUMENTS DELIVERED TO THE REGISTRAR OF COMPANIES AND AVAILABLE ON DISPLAY V-1

This summary aims to give you an overview of the information contained in this Document. As this is a summary, it does not contain all the information that may be important to you. You should read the entire Document before you decide to [REDACTED] in the [REDACTED].

There are risks associated with any [REDACTED] in the [REDACTED]. Some of the particular risks in [REDACTED] in th e [REDACTED] are set out in the section headed "Risk Factors" in this Document. You should read that section carefully before you decide to [REDACTED] in the [REDACTED].

OVERVIEW

We are a lithium-ion battery separator manufacturer that endeavours to offer high-quality products to cus2726151dr(h).7h.2(to).Dptd3(3e)-mers.7h.2.4(n)-68553eciw2726 6 lithium-ion battery separators. Separator is one of the core components of lithium-ion battery with the function of preventing physical contact between electrodes while serving as the electrolyte reservoir to enable ionic transport. It directly affects the quality, safety and production cost of a lithium-ion battery. Accord ing to Frost & Sullivan, we are the first Chinese company to master the dry process uniaxial stretching technology for lithium-ion battery separators. During the Track Record Period, the majority of our revenue was derived from the PRC, with a CAGR of 10.6% from 2022 to 2024.

The battery separator market in China has maintained a steady growth trend in recent years benefiting from positive impacts, such as the increasing shipment volume of new energy vehicle (NEV), rapid growth in energy storage, and other rising of end-use demand. From 2020 to 2024, the shipment volume of battery separator in China increased from 3.6 billion m

^{2} to approximately 23.3 billion m^2, representing a CAGR of 59.5%. In 2024, our Group ranked second in the global battery separator market and accounted for 14.4% of the market share.

As an early entrant in the lithium-ion battery sector, we have established ourselves as a recognised supplier within the global lithium-ion battery separator market. Our unique position as one of the few companies with independent equipment research and design capabilities, together with our proprietary microporosity forming technology, has enabled us to build competitive battery separator production lines. We excel in many key performance indicators for battery separators, including thickness, porosity, thermal shrinkage, breathability and puncture strength. Utilising our technological expertise and commitment to quality, we serve world-leading lithium-ion baetary 5(q)-3.6(u)1faciS a8(ali)-3.1 iS a8(

High-tech, CALB, EVE Energy and Sunwoda.

efficiency. Fourth, our established global customer relationships, including with companies already operating in or adjacent to the semiconductor industry, open up valuable pathways to potential customers in the new sector. Finally, our rigorous quality control systems and experience in meeting international standards align well with the requirements of the semiconductor industry, allowing for a smooth expansion into this business.

Leveraging our technological advantages, diverse portfolio of leading products,

SUMMARY

COMPETITIVE STRENGTHS

We believe that our business success and leading market position are underpinned by the following key strengths:

- We are a competitive lithium-ion battery separator provider, with a leading position in the industry
- We have a comprehensive and optimised product portfolio that covers comprehensive demand of downstream lithium-ion battery customers in various scenarios
- We have established a three-pronged innovation ecosystem, enabling us to maintain leading R&D capabilities, generate numerous high-quality research outcomes and build extensive technological reserves
- We are one of the few enterprises in the industry with independent equipment research and design capabilities
- Our global production and R&D network lay the foundation for our services to overseas customers
- We have an experienced and visionary management team and have established a robust talent incentive mechanism to promote sustainable development

GROWTH STRATEGIES

We plan to implement the following strategies:

- Continue to invest in the R&D of key technologies for lithium-ion battery separator products, production equipment, raw material, solid-state battery membranes and other functional membranes
- Strengthen our relationships with existing customers, accelerate overseas market expansion and actively pursue new customers worldwide
- Actively seize opportunities in the new energy industry to further implement our global strategies and develop global operating capabilities
- Actively expand our semiconductor materials business and explore opportunities within the industry, insist on "new energy + semiconductors" policy to create a second growth curve

OUR BUSINESS

During the Track Record Period, we offer our customers a comprehensive product portfolio of lithium-ion batteries separators that are designed and manufactured in-house. The table below sets forth certain details of our products.

Products Series	Main Specifications	Applications	Advantages
Dry Process Separator	Thickness: 3–40μm	Batteries for EVs, electric bicycles, power tools, consumer electronics and energy storage	High melting point temperature and consistent quality
Wet Process Separator	Thickness: 3–25μm	Batteries for EVs, power tools and high-end consumer electronics	High strength, high porosity and adjustable pore size
Coated Separator	Thickness: 5–25μm	Batteries for EVs, consumer electronics and energy storage batteries with higher safety requirements	High safety, high wettability and adjustable coating thickness

Our separators are widely used in lithium-ion batteries for transportation vehicles, electrical energy storage facilities, consumer electronics such as smartphones and laptops and industrial machinery such as cranes and forklifts. Our comprehensive product offerings can meet the varied and specific demands of our customers, namely the lithium-ion battery manufacturers, based on the end use of their batteries.

We pride ourselves on being a reliable partner to other players in the lithium-ion battery value chain. Given the essential role of battery separators in the lithium-ion battery, the downstream lithium-ion battery manufacturers place great emphasis on the selection of suppliers of separators. As the first Chinese company engaged in the research and manufacturing of lithium-ion battery separators according to Frost and Sullivan, and with more than 20 years of industry experience, we believe we have become a world-leading lithium-ion battery separator manufacturer with strong brand recognition in the industry.

In addition to our traditional lithium-ion batteries separators, we maintain a forward-looking product layout with semi-solid-state electrolyte separators, solid-state electrolyte membranes and other functional membranes in non-lithium battery fields, including heat exchange membranes, waterproof and breathable membranes and water

CORE TECHNOLOGIES

According to Frost & Sullivan, we are the first and one of the few enterprises in China with capabilities in all three types of lithium-ion battery separator production technologies, namely dry process, wet process and coated process separators. With in-house experts across various disciplines, we have independently developed a series of key technologies in relation to the manufacturing of lithium-ion battery separators, such as the microporosity forming technology and nanofibre coating technology. Utilising the core technologies that we developed, we have also designed key manufacturing equipment in-house.

We have also developed key solid-state battery technologies, including solid-state electrolyte membranes and semi-solid-state electrolyte separators. Using these advancements, we have achieved significant progress in both areas.

We are leveraging our expertise in battery separators to expand into functional membranes, making advances in heat exchange, waterproof and breathable, and water treatment membranes.

RESEARCH AND DEVELOPMENT

We are dedicated in the R&D of the underlying technologies, product development and design of manufacturing equipment for lithium-ion battery separators and other functional membranes. In addition, we pay increasing attention to the R&D of other relevant products, including solid-state electrolyte membranes and semi-solid-state electrolyte separators and semiconductor materials. We are devoted to establishing our R&D platforms, expanding our global R&D centres and building our R&D team, through which we gain access to the latest knowledge and technologies in polymer materials, new energy, nanotechnology, lithium-ion battery and semi-solid-state and solid-state battery.

We continue to invest substantial capital in R&D and innovation. For the years ended 31 December 2022, 2023 and 2024 and the nine months ended 30 September 2024 and 2025, our research and development expenses amounted to RMB207.3 million, RMB242.5 million, RMB248.0 million, RMB175.7 m

expansion in the mid- to high-end markets both domestically and overseas. We will continue to strengthen our competitiveness by improving our R&D capabilities. See "Business — Research and Development" for more details.

MANUFACTURING

The manufacturing processes of lithium-ion battery separators are mainly categorised by three different manufacturing techniques: the dry process, the wet process and the coating process, whereas coating refers to an additional process applied in base film separators produced from dry or wet processes. We adopt a "make-to-order" strategy to process customer orders and have developed an ISO production process management control system. After an order is placed by a customer, we will develop a production plan with customised raw material formulas, arrange for procurement of raw materials based on the plan, produce separators with suitable processes, conduct comprehensive product quality checks and deliver our products to customers. This allows us to manage our production cost and improve our operating efficiency.

We have established a global layout of manufacturing facilities in several areas of China to provide our customers with a wide range of battery separator products. To satisfy the fast-growing demand of our overseas customers, we plan to build new manufacturing facilities globally to further expand our production capacity and provide our target customers with comprehensive services using localised supply and supporting facilities. Our U.S., Malaysia and Sweden manufacturing bases are under construction. See "Business — Manufacturing Facilities" for more details. With a designed overseas annual production capacity of over two billion square metres, we ranked first in terms of designed overseas capacity among the Chinese lithium-ion battery separator companies.

CUSTOMERS AND SUPPLIERS

In the years ended 31 December 2022, 2023, 2024 and the nine months ended 30 September 2025, our top five customers in each period together generated RMB1,932.1 million, RMB1,903.5 million, RMB1,785.9 million and RMB1,805.0 million of revenues, respectively, accounting for 67.4%, 63.8%, 50.9% and 61.5% of our total revenue, respectively. In 2022, 2023, 2024 and the nine months ended 30 September 2025, revenue from our largest customer in each period amounted to RMB847.7 million, RMB795.2 million, RMB460.4 million and RMB434.9 million, accounting for 29.6%, 26.7%, 13.1% and 14.8% of our total revenue, respectively. See "Business — Customers" for more details.

During the Track Record Period, we purchase raw and other auxiliary materials directly from our suppliers. The main raw materials used for production of lithium-ion

total purchases of raw materials in 2022, 2023, 2024 and the nine months ended 30 September 2025, respectively. See "Business — Raw Materials and Suppliers" for more details.

PRICING

We have developed a standardised pricing reference for our sales and marketing team. We set prices based on the acceptability by our customers on one hand and our profitability on the other hand, taking into account a number of factors including, among others, costs of raw materials, size of purchase orders, customer purchase quantities, customer relationships, market competition and the prevailing market prices for separators in the target sales regions. In addition, we reserve the right to further adjust the prices for our products when we observe dramatic fluctuations in the market prices of key raw materials.

COMPETITION

Promoted by favourable regulatory policies and rapid development in downstream application scenarios, the global battery separator market has achieved a remarkable growth in total shipment volume in recent yea

We define adjusted net profit (non-IFRS measure) as net profit for the periods adjusted by adding back equity settled share-based compensation, which is a non-cash item, and [REDACTED] expenses. The following table reconciles our adjusted net profit (non-IFRS measure) for the periods indicated.

	Year ended 31 December			Nine months ended 30 September	
	2022	2023	2024	2024	2025
	RMB'000	RMB'000	RMB'000	RMB'000 (unaudited)	RMB'000
Reconciliation of net profit to adjusted net profit (non-IFRS measure)					
Net profit for the year/period	747,563	593,695	370,708	350,781	140,519
Add:					
Equity settled share-based compensation	34,904	4,811	11,982	12,541	41,936
[REDACTED] expenses	[REDACTED]	[REDACTED]	[REDACTED]	[REDACTED]	[REDACTED]
Adjusted net profit (non-IFRS measure)	782,467	598,506	382,690	363,322	183,434

Revenue

During the Track Record Period, we generated revenue from sales of lithium-ion battery separators, including dry process separators, wet process separators and coated separators.

Revenue by product category

The table below sets forth the breakdown of the revenue by product category for the periods indicated.

	Year ended 31 December						Nine months ended 30 September			
	2022		2023		2024		2024		2025	
	RMB'000	%	RMB'000	%	RMB'000	%	RMB'000 (unaudited)	%	RMB'000	%
Dry process separators	522,543	18.2	675,.	%R011.2194 ,99.5(11.5)-3283c [13.5(11..4TD .0150.2(5(11.67,1.5(11.5)47.8(-3283c [1,5)-7 Totalue						

During the Track Record Period, the average selling price of our separator products experienced a declining trend. Such decrease was primarily due to the intensive market competition driven by supply-demand imbalances. According to Frost & Sullivan, from 2022 to 2024, China's battery separator industry's production capacity expanded at a CAGR of 63.8%, surpassing the 35.8% increase in shipments. This oversupply exerted downward pressure on selling prices. According to Frost & Sullivan, our product pricing trend is in line with the industry trend in light of technical specifications, product positioning and cost structure.

In contrast, for overseas battery separator market, industry experienced strong shipment growth with relatively slower capacity expansion between 2020 and 2024, creating increasing opportunities to secure supply locally due to fast-growing demand from downstream battery manufacturers. See "Industry Overview." This supply-demand dynamic resulted in average selling prices overseas that are significantly higher than those in China.

In the future, we anticipate that expanding our production capacity overseas will further strengthen our ability to capture higher-margin opportunities and improve overall product profitability.

Revenue by geographic region of our shipment destination

During the Track Record Period, we generated most of our revenue from mainland China. The table below sets forth a breakdown of our revenue by geographic region of our shipment destination for the periods indicated.

	Year ended 31 December						Nine months ended 30 September			
	2022		2023		2024		2024		2025	
	RMB'000	%	RMB'000	%	RMB'000	%	RMB'000	%	RMB'000	%
							(unaudited)			
Mainland China	2,323,027	81.0	2,512,646	84.3	3,105,179	88.6	2,265,971	87.9	2,533,089	86.4
Others[(1)]	543,691	19.0	469,217	15.7	400,974	11.4	311,845	12.1	398,521	13.6
Total	2,866,718	100.0	2,981,863	100.0	3,506,153	100.0	2,577,816	100.0	2,931,610	100.0

Note:

(1) Others primarily consisted of South Korea, Japan, SEA and Europe.

Our total revenue increased by 13.7% from RMB2,577.8 million for the nine months ended 30 September 2024 to RMB2,931.6 million for the nine months ended 30 September 2025, primarily due to an increase in sales volume across all product categories as a result of an increase in orders from existing customers for new product launch, partially offset by a decrease in average selling pricing as a result of market competition driven by supply-demand imbalances.

Our total revenue increased by 17.6% from RMB2,981.9 million in 2023 to RMB3,506.2 million in 2024, primarily due to (i) an increase in overall sales volume and (ii) an increase in proportion of sales from coated separators, which have higher average selling prices.

Our total revenue increased by 4.0% from RMB2,866.7 million in 2022 to RMB2,981.9 million in 2023, primarily due to an increase in overall sales volume as a result of an increase in orders from existing customers for new product launch, partially offset by a decrease in average selling pricing as a result of market competition driven by supply-demand imbalances.

Gross Profit and Gross Profit Margin

The following table sets forth our gross profit and gross profit margin by product category for the periods indicated.

	Year ended 31 December						Nine months ended 30 September			
	2022		2023		2024		2024		2025	
	Gross profit	Gross profit margin	Gross profit	Gross profit margin	Gross profit	Gross profit margin	Gross profit	Gross profit margin	Gross profit	Gross profit margin
	RMB'000	%	RMB'000	%	RMB'000	%	RMB'000	%	RMB'000	%
							(unaudited)			
Dry process separators . .	170,593	32.6	236,881	35.1	94,808	20.2	57,329	15.6	25,688	7.1
Wet process separators . .	233,527	51.4	224,177	47.8	199,340	40.3	177,582	45.3	156,521	34.1
Coated separators d 8 d 8 2 4,62							7			

t41.3hseaverageelling prilesof ou(r)]TJ -2.9814 -1.2726 TD .0239 Tc [(pr)4375oduct

9)]TJ -2.1831pr1.2726 TD .0245 Tc [(Sta)-534(ff)664(,)-654(b)-671(u)-726(t)-596(a)-534(l)-596(s)-534(o)-596(a)-534(l)-596(s)-534(e)-596(l)-596(l)-596(s)-534(t)-596(h)-596(e)-534(a)-596(v)-596(e)-596(r)-596(a)-534(g)-596(e)-534(s)-596(e)-596(l)-596(l)-596(i)-596(n)-596(g)-534(p)-596(r)-596(i)-596(c)-596(e)-534(o)-596(f)-534(s)-596(e)-596(p)-596(a)-596(r)-596(a)-596(t)-596(o)-596(r)-596(s)-534(d)-596(e)-596(c)-596(r)-596(e)-596(a)-596(s)-596(e)-534(d)-596(u)-596(e)-534(t)-596(o)-534(t)-596(h)-596(e)-534(i)-596(n)-596(t)-596(e)-596(n)-596(s)-596(e)-534(c)-596(o)-596(m)-596(p)-596(e)-596(t)-596(i)-596(t)-596(i)-596(o)-596(n)-534(i)-596(n)-534(t)-596(h)-596(e)-534(m)-596(a)-596(r)-596(k)-596(e)-596(t)-534(a)-596(s)-534(w)-596(e)-534(s)-596(e)-596(e)-534(k)-596(n)-596(o)-596(w)-534(p)-596(r)-596(o)-596(d)-596(u)-596(c)-596(t)-534(l)-596(a)-596(u)-596(n)-596(c)-596(h)-534(a)-596(n)-596(d)-534(i)-596(n)-534(o)-596(r)-596(d)-596(e)-596(r)-596(s)-534(f)-596(r)-596(o)-596(m)-534(e)-596(x)-596(i)-596(s)-596(t)-596(i)-596(n)-596(g)-534(c)-596(u)-596(s)-596(t)-596(o)-596(m)-596(e)-596(r)-596(s)-534(f)-596(o)-596(r)-534(n)-596(e)-596(w)-534(p)-596(r)-596(o)-596(d)-596(u)-596(c)-596(t)-534(l)-596(a)-596(u)-596(n)-596(c)-596(h)-596(,)-534(p)-596(a)-596(r)-596(t)-596(i)-596(a)-596(l)-596(l)-596(y)-534(o)-596(f)-596(f)-534(s)-596(e)-596(t)-534(b)-596(y)-534(a)-534(d)-596(e)-596(c)-596(r)-596(e)-596(a)-596(s)-596(e)-534(i)-596(n)-534(a)-596(v)-596(e)-596(r)-596(a)-596(g)-596(e)-534(s)-596(e)-596(l)-596(l)-596(i)-596(n)-596(g)-534(p)-596(r)-596(i)-596(c)-596(i)-596(n)-596(g)-534(a)-596(s)-534(a)-596(e)-596(s)-596(u)-596(l)-596(t)-534(o)-596(f)-534(m)-596(a)-596(r)-596(k)-596(e)-596(t)-534(c)-596(o)-596(m)-596(p)-596(e)-596(t)-596(i)-596(t)-596(i)-596(o)-596(n)-534(d)-596(r)-596(i)-596(v)-596(e)-596(n)-534(b)-596(y)-534(s)-596(u)-596(p)-596(p)-596(l)-596(y)-596(-)-596(d)-596(e)-596(m)-596(a)-596(n)-596(d)-534(i)-596(m)-596(b)-596(a)-596(l)-596(a)-596(n)-596(c)-596(e)-596(s)-596(.)-534(B)-596(a)-596(s)-596(e)-596(d)-534(o)-596(n)-534(t)-596(h)-596(e)-534(f)-596(o)-596(r)-596(e)-596(g)-596(o)-596(i)-596(n)-596(g)-534(,)-534(w)-596(e)-534(b)-596(e)-596(l)-596(i)-596(e)-596(v)-596(e)-534(t)-596(h)-596(a)-596(t)-534(o)-596(u)-596(r)-534(g)-596(r)-596(o)-596(s)-596(s)-534(p)-596(r)-596(o)-596(f)-596(i)-596(t)-534(a)-596(n)-596(d)-534(g)-596(r)-596(o)-596(s)-596(s)-534(p)-596(r)-596(o)-596(f)-596(i)-596(t)-534(m)-596(a)-596(r)-596(g)-596(i)-596(n)-534(w)-596(i)-596(l)-596(l)-534(b)-596(e)-534(s)-596(u)-596(b)-596(j)-596(e)-596(c)-596(t)-534(t)-596(o)-534(c)-596(e)-596(r)-596(t)-596(a)-596(i)-596(n)-534(p)-596(r)-596(e)-596(s)-596(s)-596(u)-596(r)-596(e)-534(f)-596(r)-596(o)-596(m)-534(o)-596(u)-596(r)-534(c)-596(u)-596(s)-596(t)-596(o)-596(m)-596(e)-596(r)-596(s)-534(a)-596(s)-534(w)-596(e)-534(m)-596(a)-596(y)-534(n)-596(e)-596(e)-596(d)-534(t)-596(o)-534(a)-596(d)-596(j)-596(u)-596(s)-596(t)-534(o)-596(u)-596(r)-534(p)-596(r)-596(i)-596(c)-596(i)-596(n)-596(g)-534(s)-596(t)-596(r)-596(a)-596(t)-596(e)-596(g)-596(i)-596(e)-596(s)-534(t)-596(o)-534(r)-596(e)-596(m)-596(a)-596(i)-596(n)-534(c)-596(o)-596(m)-596(p)-596(e)-596(t)-596(i)-596(t)-596(i)-596(v)-596(e)-534(i)-596(n)-534(t)-596(h)-596(e)-534(f)-596(u)-596(t)-596(u)-596(r)-596(e)-534(.)-534(T)-596(h)-596(e)-534(f)-596(o)-596(l)-596(l)-596(o)-596(w)-596(i)-596(n)-596(g)-534(t)-596(a)-596(b)-596(l)-596(e)-534(s)-596(e)-596(t)-596(s)-534(f)-596(o)-596(r)-596(t)-596(h)-534(a)-596(n)-596(d)-534(a)-596(n)-596(a)-596(l)-596(y)-596(s)-596(e)-534(o)-596(u)-596(r)-534(g)-596(r)-596(o)-596(s)-596(s)-534(p)-596(r)-596(o)-596(f)-596(i)-596(t)-534(a)-596(n)-596(d)-534(g)-596(r)-596(o)-596(s)-596(s)-534(p)-596(r)-596(o)-596(f)-596(i)-596(t)-534(m)-596(a)-596(r)-596(g)-596(i)-596(n)-534(b)-596(y)-534(p)-596(r)-596(o)-596(d)-596(u)-596(c)-596(t)-534(c)-596(a)-596(t)-596(e)-596(g)-596(o)-596(r)-596(y)-534(f)-596(o)-596(r)-534(t)-596(h)-596(e)-534(p)-596(e)-596(r)-596(i)-596(o)-596(d)-596(s)-534(i)-596(n)-596(d)-596(i)-596(c)-596(a)-596(t)-596(e)-596(d)-596(.)-534(T)-596(h)-596(e)-534(f)-596(o)-596(l)-596(l)-596(o)-596(w)-596(i)-596(n)-596(g)-534(t)-596(a)-596(b)-596(l)-596(e)-534(s)-596(e)-596(t)-596(s)-534(f)-596(o)-596(r)-596(t)-596(h)-534(a)-596(v)-596(e)-534(a)-596(v)-596(e)-596(r)-596(a)-596(g)-596(e)-534(s)-596(e)-596(l)-596(l)-596(i)-596(n)-596(g)-534(p)-596(r)-596(i)-596(c)-596(e)-534(o)-596(f)-534(s)-596(e)-596(p)-596(a)-596(r)-596(a)-596(t)-596(o)-596(r)-596(s)-534(d)-596(e)-596(c)-596(r)-596(e)-596(a)-596(s)-596(e)-534(d)-596(u)-596(e)-534(t)-596(o)-534(t)-596(h)-596(e)-534(i)-596(n)-596(c)-596(r)-596(e)-596(a)-596(s)-596(e)-534(i)-596(n)-534(o)-596(v)-596(e)-596(r)-596(a)-596(l)-596(l)-534(s)-596(a)-596(l)-596(e)-596(s)-534(v)-596(o)-596(l)-596(u)-596(m)-596(e)-534(a)-596(s)-534(a)-534(r)-596(e)-596(s)-596(u)-596(l)-596(t)-534(o)-596(f)-534(a)-596(n)-534(i)-596(n)-596(c)-596(r)-596(e)-596(a)-596(s)-596(e

Our profit for the year decreased by 37.6% from RMB593.7 million in 2023 to RMB370.7 million in 2024, primarily due to a decrease in gross profit as the decrease in the average selling prices of our products exceeded the decrease in production costs as a result of market competition.

Our profit for the year decreased by 20.6% from RMB747.6 million in 2022 to RMB593.7 million in 2023, primarily due to (i) an increase in general and administrative expenses resulting from (a) an increase in employee benefit expenses as a result of increased number of general and administrative personnel as our business expanded, and (b) an increase in professional fees in relation to a litigation that reached settlement in 2023; and (ii) our recognition of other losses, net, primarily because we recorded settlement expenses of RMB107.7 million in relation to litigation in 2023. See "Business — Legal Proceedings and Compliance."

Summary of Consolidated Statements of Financial Position

The following table sets forth a summary of our consolidated statement of financial position as at the dates indicated.

	As at 31 December			As at 30 September
	2022	2023	2024	2025
	RMB'000	RMB'000	RMB'000	RMB'000
Total non-current assets	6,918,689	10,526,935	15,603,454	18,341,014
Total current assets	6,782,495	7,418,527	7,542,081	7,333,903
Total assets	13,701,184	17,945,462	23,145,535	25,674,917
Total non-current liabilities	2,788,496	3,964,513	7,713,391	7,699,851
Total current liabilities	2,329,589	4,022,172	6,061,022	7,913,815
Total liabilities	5,118,085	7,986,685	13,174,413	15,613,666
Net current assets/(liabilities)	4,452,906	3,396,355	1,481,059	(579,912)
Net assets	8,583,099	9,958,777	9,971,122	10,061,251

We record net current assets of RMB1,481.1 million as at 31 December 2024 and net current liabilities of RMB579.9 million as at 30 September 2025, primarily due to (i) an increase in borrowings to supplement our working capital, and (ii) a decrease in cash and cash equivalents, partially offset by a decrease in other payables and accruals, resulting from a decrease in payables for acquisition of non-current assets as a result of our settlement with suppliers.

Our net current assets decreased by 56.4% from RMB3,396.4 million as at 31 December 2023 to RMB1,481.1 million as at 31 December 2024, primarily due to (i) an increase in borrowings for construction of manufacturing bases, (ii) a decrease in time deposits to support construction of manufacturing bases, and (iii) an increase in other payables and accruals resulting from (i) an increase in construction and equipment payables for manufacturing bases, and (ii) an increase in endorsed notes receivable we used to settle payments with suppliers that have not been derecognized and not yet due, partially offset by an increase in cash and cash equivalents.

Our net current assets decreased by 23.7% from RMB4,452.9 million as at 31

KEY FINANCIAL RATIOS

The following table sets forth our key financial ratios as at the dates or for the periods indicated:

	As at/Year ended 31 December			As at/Nine months ended 30 September	
	2022	2023	2024	2024	2025
				(unaudited)	
Gross profit margin[(1)]	44.8%	43.3%	28.1%	30.0%	21.3%
Net profit margin[(2)]	26.1%	19.9%	10.6%	13.6%	4.8%
Return on equity[(3)]	N/A	6.4%	3.7%	N/M[(8)]	NM[(8)]
Current ratio[(4)]	2.9	1.8	1.2	N/A	0.9
Liability-to-asset ratio[(5)]	37.4%	44.5%	56.9%	N/A	60.8%
Gearing ratio[(6)]	40.7%	60.8%	107.3%	N/A	128.7%
Interest coverage ratio[(7)]	13.8	8.4	4.1	4.9	1.8

Notes:

(1) Gross profit margin was calculated based on gross profit divided by revenue for the respective year/period and multiplied by 100%.

(2) Net profit margin was calculated based on net profit divided by revenue for the respective year/period and multiplied by 100%.

(3) Return on equity was calculated based on net profit of the respective year/period, divided by the arithmetic mean of the opening and closing balances of total equity and multiplied by 100%.

(4) Current ratio was calculated based on the total current assets divided by the total current liabilities as at the relevant dates.

(5) Liability-to-asset ratio was calculated based on total liabilities divided by total assets as of the relevant dates and multiplied by 100%.

(6) Gearing ratio equals total debt, including total borrowings and lease liabilities, for the period divided by total equity for the period and multiplied by 100%.

(7) Interest coverage ratio represents profit before finance costs (expensed only) and income tax divided by finance costs (expensed only) for the relevant period.

(8) Such ratio is not meaningful as number for the period is not comparable to the numbers for the prior three years of the Track Record Period.

Our operations and the [REDACTED] involve certain risks and uncertainties, including (i) risks relating to our business and industry, (ii) risks relating to where we conduct business, and (iii) risks relating to the [REDACTED], which are set out in the

USE OF [REDACTED]

Assuming that [REDACTED] is not exercised, after deducting the [REDACTED] and other estimated [REDACTED] expenses payable by us in connection with the [REDACTED], and assuming an [REDACTED] of HK$[REDACTED] per [REDACTED] (being the mid-point of the indicative [REDACTED] of HK$[REDACTED] and HK$[REDACTED]) , we estimate that we will receive net [REDACTED] of approximately HK$[REDAC TED] (equivalent to RMB[REDACTED]) from the [REDACTED]. We intend to use t he [REDACTED] from the [REDACTED] for the purposes and in the amounts set forth below:

- approximately [REDACTED]%, or HK$[REDACTED], will be allocated for strengthening our R&D capabilities in sdid-state electrolyte membranes, other functional membranes and next-generation lithium-ion battery separator products;

- approximately [REDACTED]%, or HK$[R EDACTED], will be allocated for the expansion of our overseas network, specifically in Malaysia and the United States;

- approximately [REDACTED]%, or HK$[REDACTED], will be allocated for investments in companies specialising in new battery separator materials and semiconductor;

- approximately [REDACTED]%, or HK$[REDACTED], will be used to repay the fixed asset loan for our Sweden manufacturing base; and

- approximately [REDACTED]%, or HK$[REDACTED], will be allocated for general working capital and general corporate purposes.

See "Future Plans and Use of [RED ACTED] — Use of [REDACTED] " for more details.

OUR LISTING ON THE SHENZHEN S TOCK EXCHANGE AND SIX SWISS EXCHANGE AND REASONS FOR THE [REDACTED] ON THE STOCK EXCHANGE

Our Company has been listed on ChiNext of the Shenzhen Stock Exchange and the SIX Swiss Exchange since 2016 and 2023, respectively. We seek to be [REDACTED] on the Hong Kong Stock Exchange in order to further advance our global strategic layout, establish an international capital operation platform, and enhance our comprehensive competitiveness. please see "Business — Our Growth Strategies" and "Future Plans and Use of [REDACTED]

attention in relation to our compliance record on the Shenzhen Stock Exchange and SIX Swiss Exchange. Based on the independent due diligence conducted by the Sole Sponsor, nothing has come to the Sole Sponsor's attention that would cause it to disagree with our Directors' confirmation with regard to the compliance records of the Company on the Shenzhen Stock Exchange and SIX Swiss Exchange. As confirmed by our PRC legal

Notes:

(1) The calculation of [REDACTED] of our Shares is based on [REDACTED] H Shares expected to be in issue immediately upon completion of the [REDACTED] (assuming the [REDACTED] is not exercised).

(2) The calculation of [REDACTED] of our Shares is based on the assumption that [REDACTED] H Shares will be in issue immediately after completion ofthe [REDACTED] (assuming the [REDACTED] is not exercised) and 1,345,710,639 A Shares will be in issue immediately after completion of the [REDACTED] with an average closing price of the Company for th

DIVIDEND POLICY

We have a formal dividend policy. Subject to PRC laws and regulations, including the PRC Company Law ( ) and the No.3 Guideline for the Supervision of Listed Companies — Cash Dividend Distribution of Listed Companies (2025) (3 — 2025), and Articles 168 through 175 of the Articles of Association, in principle, we shall distribute dividends in cash. The profit distributed in cash in any single year shall not be less than 10% of the distributable profit realised for that year. Within any three consecutive (e1(025)a[((rs54.4424 (Th52.48 3rss(ash)p2(the)ec

approximately HK$[REDACTED] non-[REDACTED]-related expenses and fees (including (a) fees and expenses of legal advisors and accountants of approximately HK$[REDACTED] and (b) other fees and expenses of HK$[REDACTED]).

The [REDACTED] expenses above are the latest practicable estimate for reference only, and the actual amount may differ from this estimate.

In this document, unless the context otherwise requires, the following terms and

DEFINITIONS

"Changzhou Senior"	Changzhou Senior New Energy Materials Co., Ltd. ( ), a limited liability company established under the laws of the PRC on 5 April 2017, and a wholly owned subsidiary of our Company
"close associate(s)"	has the meaning ascribed to it under the Listing Rules
"Companies (Winding Up and Miscellaneous Provisions) Ordinance"	the Companies (Winding Up and Miscellaneous Provisions) Ordinance (Chapter 32 of the Laws of Hong Kong), as amended, supplemented or otherwise modified from time to time
"Companies Ordinance"	the Companies Ordinance (Chapter 622 of the Laws of Hong Kong), as amended, supplemented or otherwise modified from time to time
"Company", "our Company", or "the Company"	Shenzhen Senior Technology Material Co., Ltd. ( ), a joint stock company with limited liability established under the laws of the PRC
"connected person(s)"	has the meaning ascribed to it under the Listing Rules
"connected transaction(s)"	has the meaning ascribed to it under the Listing Rules
"CSDC"	China Securities Depository and Clearing Corporation Limited ( )
"CSRC"	the China Securities Regulatory Commission ( )
"Director(s)"	the director(s) of our Company
"Europe Senior"	Senior Material Ultimate Holding (Europe) AB, a limited liability company establish under the laws of Sweden on 21 December 2021, and a wholly owned subsidiary of our Company
"EVE Energy"	EVE Energy Co., Ltd. ( ), a company established in 2001 in the PRC, and one of our major customers
"Foshan Senior"	Senior Material (Foshan) New Materials Technology Co., Ltd. ( ), a limited liability company established under the laws of the PRC on 15 February 2023, and a subsidiary of our Company

"Frost & Sullivan"	Frost & Sullivan (Beijing) Inc., Shanghai Branch Co., an independent professional market research and consulting company
"Frost & Sullivan Report"	the report with respect to this [REDACTED] issued by Frost & Sullivan
"General Rules of HKSCC"	the General Rules of HKSCC as may be amended or modified from time to time and where the context so permits, shall include the HKSCC Operational Procedures
[REDACTED]	[REDACTED]
"Gotion High-tech"	Gotion High-Tech Co., Ltd. ( ), a company established in 2006 in the PRC, and one of our major customers
"Governmental Authority"	any governmental, regulatory, or administrative commission,

[REDACTED]	[REDACTED]
[REDACTED]	[REDACTED]
[REDACTED]	[REDACTED]
[REDACTED]	[REDACTED]
"Hong Kong Listing Rules" or "Listing Rules"	the Rules Governing the Listing of Securities on The Stock Exchange of Hong Kong Limited (as amended from time to time)
[REDACTED]	[REDACTED]
[REDACTED]	[REDACTED]
[REDACTED]	[REDACTED]
[REDACTED]	[REDACTED]
"IFRS"	International Financial Re porting Standards, as issued by the International Accounting Standards Board

"Independent Third Party(ies)"	any entity or person who is not a connected person of our Company within the meaning ascribed to it under the Listing Rules
[REDACTED]	[REDACTED]
[REDACTED]	[REDACTED]
[REDACTED]	[REDACTED]
"ISO"	the International Organisation for Standardisation, an independent, non-governmental international organisation that develops and publishes standards to ensure the quality, safety, efficiency, and interoperability of products, services, and systems
"Jiangsu Senior"	Jiangsu Senior New Energy Materials Co., Ltd. ( ), a limited liability company established under the laws of the PRC on 12 March 2018, and a wholly owned subsidiary of our Company
"Latest Practicable Date"	26 January 2026, being the latest practicable date for ascertaining certain information in this document before its publication
"Laws"	all laws, statutes, legislation, ordinances, rules, regulations, guidelines, opinions, notices, circulars, directives, requests, orders, judgements, decrees, or rulings of any Governmental Authority (including the Stock Exchange and the SFC) of all relevant jurisdictions
"LG Energy Solution"	LG Energy Solution Ltd., a company established in 2020 in South Korea, and one of our major customers
[REDACTED]	[REDACTED]
"Listing Committee"	the Listing Committee of the Hong Kong Stock Exchange

[REDACTED]	[REDACTED]
"MOF"	Ministry of Finance of the PRC ( )
"Ms. Chen"	Ms. Chen Weirong ( ), being the spouse of Prof. Chen, and one of our Single Largest Shareholders
"Murata"	Murata Manufacturing Co., Ltd., a company established in 1944 in Japan, and one of our major customers
"Nantong Senior"	Senior Material (Nantong) New Materials Technology Co., Ltd. ( ), a limited liability company established under the laws of the PRC on 18 June 2021, and a wholly owned subsidiary of our Company
"Nomination Committee"	the nomination committee of the Board
[REDACTED]	[REDACTED]
[REDACTED]	[REDACTED]
[REDACTED]	[REDACTED]
[REDACTED]	[REDACTED]

DEFINITIONS

"Prof. Chen"	Prof. Chen Xiufeng ( ), the founder, executive Director, chairman of the Board and general manager of our Company, and one of our Single largest Shareholders
"PRC" or "China"	the People's Republic of China, but for the purposes of this document only (unless otherwise indicated) excluding Hong Kong the Macau Special Administrative Region of the PRC and Taiwan Province
"PRC Company Law"	the Company Law of the PRC, as amended, modified and/or otherwise supplemented from time to time
"PRC GAAP"	generally accepted accounting principles in the PRC
"PRC Government Body"	has the meaning ascribed to it under the Listing Rules
"PRC Legal Advisor"	King & Wood Malle sons, our legal advisor on PRC laws
"Principal Subsidiaries"	our principal subsidiaries as identified in "History and Corporate Structure — Principal Subsidiaries and Operating Entities"
"R&D"	research and development
"Regulation S"	Regulation S under the U.S. Securities Act
"Restricted Stock(s)"	restricted stock(s) granted under the 2022 Share Incentive Plan
"RMB or Renminbi"	Renminbi, the lawful currency of China
"SAFE"	the State Administration for Foreign Exchange of the PRC ( )
"SAFT"	Saft Groupe SAS, a company established in 1918 in France, and one of our major customers
"Samsung SDI"	Samsung SDI Co., Ltd., a South Korean company founded in 1970, and one of our major customers
"SEA"	Southeast Asia
"SFC"	Securities and Futures Commission of Hong Kong
"SFO" or "Securities and Futures Ordinance"	Securities and Futures Ordinance (Chapter 571 of the Laws of Hong Kong), as amended, supplemented or otherwise modified from time to time

"Shanghai-Hong Kong Stock Connect"	a securities trading and clearing links programme developed by the Hong Kong Stock Exchange, Shanghai Stock Exchange, HKSCC and China Securities Depository and Clearing Corporation Limited for mutual market access between Hong Kong and Shanghai
"Share(s)"	shares in the share capital of our Company, with a nominal value of RMB1.00 each, comprising our A Shares and our H Shares
"Share Incentive Plans"	the share incentive plans of our Company currently in effect, including the 2023 Share Incentive Plan and the 2024 Share Incentive Plan
"Share Option(s)"	stock option(s) granted under the 2023 Share Incentive Plan and the 2024 Share Incentive Plan (as the case may be)
"Shenzhen-Hong Kong Stock Connect"	a securities trading and clearing links programme developed by the Hong Kong Stock Exchange, Shenzhen Stock Exchange, HKSCC and China Securities Depository and Clearing Corporation Limited for mutual market access between Hong Kong and Shenzhen

"Stock Exchange" or "Hong Kong Stock Exchange"	The Stock Exchange of Hong Kong Limited
"subsidiary" or "subsidiaries"	has the meaning ascribed to it in section 15 of the Companies Ordinance
"substantial shareholder(s)"	has the meaning ascribed to it in the Listing Rules
"Sunwoda"	Sunwoda Electronic Co., Ltd. ( ), a company established in 1997 in the PRC, and one of our major customers
"Track Record Period"	the three years ended 31 December 2022, 2023, 2024 and nine months ended 30 September 2025
"U.S.", "US" or "United States"	the United States of America, its territories, its possessions and all areas subject to its jurisdictions
"U.S. dollars" or "US$"	United States dollars, the lawful currency of the United States
"U.S. Securities Act"	United States Securities Act of 1933 and the rules and regulations promulgated thereunder
"UK"	the United Kingdom, it territories, its possessions and all areas subject to its jurisdictions
[REDACTED]	[REDACTED]
"VAT"	value-added tax
[REDACTED]	[REDACTED]
[REDACTED]	[REDACTED]
"2022 Share Incentive Plan"	our employee incentive plan approved and adopted by our Board on 25 January 2022 and by the extraordinary general meeting of our Company on 21 February 2022
"2023 Share Incentive Plan"	our employee incentive plan approved and adopted by our Board on 24 October 2023 and by the extraordinary general meeting of our Company on 9 November 2023
"2024 Share Incentive Plan"	our employee incentive plan approved and adopted by our Board on 10 September 2024 and by the extraordinary general meeting of our Company on 27 September 2024

DEFINITIONS

"%"	per cent

For ease of reference, the names of Chinese laws and regulations, governmental authorities, institutions, natural persons or other entities (including our subsidiaries) have been included in this document in both the Chinese and English languages and in the event of any inconsistency, the Chinese versions shall prevail.

In this document, unless the context otherwise requires, explanations and definitions of certain terms used in this document in connection with our Company and our business shall have the meanings set out below. The terms and their meanings may not always correspond to standard industry meaning or usage of these terms.

"AGV"	automated guided vehicle
"AI"	artificial intelligence
"automated mass assembly"	a manufacturing process in which large quantities of identical or similar products are put together using machinery and robotics with minimal human involvement
"base film"	the initial layer of material typically made from polymers such as polyethylene or polypropylene and undergoes various processing steps to achieve the desired properties for use in batteries
"breathability"	the ability of the separator material to allow the passage of gases and ions while maintaining its structural integrity
"CAGR"	compound annual growth rate
"casting"	a method for producing films by spreading liquid resin, a resin solution, or a dispersion onto a moving carrier, curing it by appropriate methods, and then stripping the formed film from the carrier
"ceramic alumina"	a widely used coatingmaterial for separators to enhance their thermal stability and mechanical strength, contributing to the overall safety and performance of the battery
"ceramic board"	a type of electronic circuit board made from ceramic materials such as aluminium nitride, aluminium oxide or beryllium oxide
"coated separator"	a type of battery separator that has an additional layer or coating applied to its surface
"coated thickness"	the thickness of the additional layer or layers applied to the base separator material

GLOSSARY OF TECHNICAL TERMS

"consumer electronics battery"	a type of battery specifically designed to power consumer electronic devices such as smartphones, laptops, cameras and other portable gadgets
"crystalline polymer membrane"	a separator made from polymers that exhibit a crystalline structure, which is used to separate the anode and cathode in lithium-ion batteries, preventing short circuits while allowing the flow of ions
"desalination efficiency"	how effectively a desalination process converts saline water (such as seawater or brackish water) into fresh, usable water
"die head"	the component in the extrusion or casting machine that shapes and distributes the molten material into a thin film as it exits the machine
"dry process"	a solvent-free, physical pore formation technology by melting the raw materials such as polypropylene or Polyethylene
"dry process separator"	a type of battery separator produced using a dry manufacturing process
"dry process single-drawing technology"	a method used in the production of lithium-ion battery separators that involves the extrusion of raw materials, such as polypropylene, into a uniform melt, which is then cast into a base film
"energy density"	the amount of energystored in a given system, substance, or material per unit of volume or mass
"electrocatalytic membrane"	a specialised membrane that incorporate electrocatalysts to facilitate electrochemical reactions
"electrolyte membrane"	a semipermeable membrane designed to conduct ions, typically protons, while acting as an electronic insulator and reactant barrier
"energy storage battery"	a device that stores electrical energy for later use
"EV"	electric vehicle
"extrusion"	a processing method in which material passes through the interaction between the extruder barrel and screw, being simultaneously heated and plasticised while being pushed forward by the screw, then continuously passing through the die head to form products or semi-finished products with various cross-sections

GLOSSARY OF TECHNICAL TERMS

"interfacial impedance"	a measure of the resistance and reactance encountered by the flow of electric current at the interface typically between an electrode and an electrolyte in an electrochemical cell, such as a battery or fuel cell
"Kgf/cm ^{2}"	kilogramme-force per square centimetre
"kPa"	kilopascal
"LATP"	lithium aluminium titanium phosphate
"LFP"	lithium iron phosphate, a type of lithium-ion battery that uses lithium iron phosphate as the cathode material and a graphitic carbon electrode with a metallic backing as the anode
"lithium-ion battery"	rechargeable batteries that utilise lithium ions as conductive ions that move between the anode and cathode, and charge and discharge through the mutual conversion of chemical energy and electrical energy
"lithium metal anodes"	an electrode made of pure lithium metal and is used as the negative electrode in certain types of advanced batteries, particularly lithium metal and some next-generation solid-state batteries
"MES"	manufacturing execution system, a software-based solution used in manufacturing to monitor, control and optimise production processes on the shop floor
"MPa"	megapascal
"mS/cm"	milliSiemens per centimetre
"microporosity forming technology"	creating a microporous structure within the separator material to enhance its performance in lithium-ion batteries
"nanofibre coating"	a coating technology that utilises low-dimensional nanomaterials as composite reinforcement materials to achieve ideal thickness, heat resistance exceeding and breakdown temperature
"NEV"	new energy vehicle
"oil coating"	a type of coating that uses natural or synthetic oils as the primary component
"PE"	polyethylene
"PEO"	polyethylene oxide

GLOSSARY OF TECHNICAL TERMS

"photovoltaic green energy"	electricity generated from sunlight using photovoltaic technology, specifically solar panels
"PI"	polyimide
"PMC"	product material control
"polyolefin"	polymer of ethylene, propylene, or higher olefins
"pore-forming agent"	Substance added to materials to create pores or voids within the structure
"porosity"	the proportion of internal pores within the apparent volume of granular materials, an important parameter that affects the fluid transmission performance in porous media
"porous membrane"	a type of membrane that contains tiny pores or holes, allowing certain substances to pass through while blocking others
"PP"	polypropylene
"PPO"	polyphenylene oxide, a high-performance thermoplastic polymer derived from phenols
"proton conductivity"	the ability of a material to conduct protons through its structure
"puncture strength"	a measure of a material's ability to withstand penetration by a sharp or pointed object
"PVDF"	polyvinylidene fluoride, a high-performance thermoplastic fluoropolymer produced by the polymerization of vinylidene difluoride
"quartz component"	a part made from quartz, a hard, crystalline mineral composed of silicon dioxide
"reductive resistant"	the ability to withstand reduction, which are chemical reactions caused by gaining electrons, when exposed to an electron-rich environment, such as that created by a lithium metal anode
"semi-solid-state electrolyte separator"	a key component in semi-solid-state batteries to enhance battery performance and safety
"shutdown temperature"	the specific temperature at which the separator material melts or closes its pores, effectively stopping the flow of ions between the anode and cathode

GLOSSARY OF TECHNICAL TERMS

"SMT"	surface mount technology, a method used in electronics manufacturing where electronic components are mounted directly onto the surface of a printed circuit board
"sodium-ion battery"	batteries that utilise sodium ions as conductive ions that move between the anode and cathode, and charge and discharge through the mutual conversion of chemical energy and electrical energy
"solid ionic conductor"	a solid material that can conduct electrically charged atoms or molecules through its structure, allowing ionic movement while remaining in the solid state
"solid-state battery"	a type of rechargeable lithium-ion batteries that use solid-state electrolyte
"solid-state electrolyte membrane"	a crucial component in solid-state batteries designed to replace traditional liquid electrolytes
"stretch"	a method that aligns the macromolecular chains in a polymer along the direction of an external force, thereby improving the structure and mechanical properties of the polymer
"ternary lithium-ion battery"	a type of batteries that integrates a cathode composed of three metallic elements, such as nickel, cobalt and manganese
"thermal runaway time"	the duration it takes for a system, such as a battery, to reach a state of thermal runaway
"thermal shrinkage rate"	a measure of how much a material contracts in size when subjected to a specified elevated temperature for a certain period
"thermoelectric semiconductor"	a material that can convert temperature differences into electrical voltage and vice versa
"uniaxial stretching technology"	a method used to manufacture lithium-ion battery separators through stretching the base film in one direction at controlled temperatures
"volatile organic solvents"	organic chemicals that easily evaporate at room temperature due to their high vapour pressure
"volumetric energy density"	the amount of energy stored in a given system or substance per unit volume
"water treatment membrane"	a barrier that allows water to pass through while blocking contaminants based on properties such as size or charge

GLOSSARY OF TECHNICAL TERMS

"waterproof and breathable membrane"	a specialised membrane designed to provide both water resistance and breathability
"WCS"	warehouse control system, a software application designed to manage and direct the real-time activities within a warehouse or distribution centre
"wet process"	a chemical microporosity formation technology by using solvents to dissolve polymers
"wet process separator"	a type of battery separator produced using a solvent-based manufacturing process
"white oil recycling"	the process of collecting, treating and repurposing used white oil, which is a highly refined mineral oil used in various industrial and cosmetic applications
"WMS"	warehouse management system, a software application designed to optimise and manage the daily operations within a warehouse or distribution centre
" m"	micrometres
" m/pa s"	micrometres per pascal-second, a unit used to measure air permeance

We have included in this document forward-looking statements. Statements that are not historical facts, including but not limited to statements about our intentions, beliefs, expectations or predictions for the future, are forward-looking statements.

This document contains forward-looking statements and information relating to us and our subsidiaries that are based on the beliefs of our management as well as assumptions made by and information currently available to our management. When used in this document, the words “aim,” “anticipate,” “aspire,” “believe,” “could,” “expect,” “going

- our business strategies and plans to achieve these strategies, including our service and expansion plans;
- our ability to defend our intellectual rights and protect confidentiality;
- the effectiveness of our quality control systems;
- change or volatility in interest rates, forei

money were to occur, or injunctive relief were issued against us, it may result in significant monetary liabilities and may materially disrupt our business and operations by restricting or prohibiting our use of the intellectual property in question, and our business, financial position, results of operations, prospects and reputation could be materially and adversely affected.

The average selling price of our products may face downward pressure, which will adversely affect our profit margins, result of operations and financial condition.

The average selling price of our products is influenced by a variety of factors beyond our control, including but not limited to raw material costs, competitor pricing, market trends and labour costs. During the Track Record Period, the average selling price of our battery separator products experienced a downward trend due to market competition. As a result, our gross profit decreased by 23.7% from RMB1,290.4 million in 2023 to RMB984.3 million in 2024, and decreased by 19.1% from RMB773.2 million for the nine months ended 30 September 2024 to RMB625.6 million for the nine months ended 30 September 2025. Our gross profit margin amounted to 44.8%, 43.3%, 28.1%, 30.0% and 21.3% in 2022, 2023, 2024 and the nine months ended 30 September 2024 and 2025. See "Financial Information — Description of Principal Consolidated Statements of Comprehensive Income Items." We cannot predict the future trend of the average selling price of our products, nor can we guarantee that the fluctuation of average selling price will not continue. Any decline in the average selling price could result in reduced gross profit margins and gross profit, which may adversely affect our results of operations and financial condition.

All of our revenue is derived from lithium-ion battery separators. Such relatively homogeneous product mix may cause risks in relation to policy restrictions and shifts in market demands.

Our income relies on the sales performance of the lithium-ion battery separators. As such, our product mix is relatively homogeneous and, to some extent, lacks diversity which may expose us to more risks and uncertainties in times of volatile market conditions compared with those of our competitors that generate their income from a more diversified product portfolio.

In particular, we may be subject to changes in relevant policies and shifts in market demand. If the relevant regulatory bodies were to impose TD .02-1.9-4(e)o4e-341iand.rdedes u

Our business is subject to the market forces in the new energy vehicle and energy storage industries and our results are dependent in part on the changes in our customers' industries and market demand for their end products.

Our principal activities are dependent on the market forces in the NEV and energy storage industries. The demand for lithium-ion battery separators is dependent on factors such as the use of lithium-ion batteries for NEV and energy storage in end markets, new technological developments resulting in new products and/or technology substitutions, and general economic conditions. The demand for lithium-ion batteries has been growing rapidly in recent years, mainly due to the rapid growth in demand for NEVs and energy storage. See "Industry Overview". Moreover, our customers generally work with us to design and develop our products for use in their end products, such as new energy batteries and NEVs. Accordingly, demand for our separator products depends in part on the demand for the end products of our customers, and the pace of industry acceptance and adoption of

continual advances made in science and techno

payment acceleration of our other debts. In the event that some or all of our debt payments

RISK FACTORS

The success of our overseas expansion plans depends on whether we could adequately, timely and effectively address the risks associated with overseas operations, such as failure to adopting different legal framework and government policies, restrictions or requirements relating to foreign investments, non-compliance with the requirements of applicable sanctions, antibribery and related laws and regulations, failure to protect our reputation from negative publicity against us, and limitations on ability of non-nationals to reside and work in such countries. We may not be able to develop and implement policies and strategies that will be effective in each location where we do business. A change in one or more of the factors described above may have a material adverse effect on our business, financial condition and results of operations.

Failure to compete effectively may materially and adversely affect our business, financial condition, results of operations and prospects.

According to Frost & Sullivan, the market size of global battery separator industry by shipment volume increased from 6.4 billion m^2 in 2020 to 27.7 billion m^2 in 2024 at a CAGR of 44.5%. Continual advances in related technologies in the lithium-ion battery separator industry, the economies of scale facilitated by capital investment and the rapid increase in production capacity have, on the one hand, resulted in a gradual reduction of production costs, and, on the other, made market competition increasingly fierce.

We may face strong competition from our existing competitors as well as new industry entrants. If we are unable to maintain our competitive advantages and compete successfully against our competitors and new industry entrants in the future, our business, financial condition, results of operations and prospects may be materially and adversely affected.

We are subject to risks associated with international trade policies, geopolitics and trade protection measures, export control and economic or trade sanctions.

We are subject to the risks associated with international trade policies, geopolitics and trade protection measures, and our business, financial condition and results of operations could be adversely affected. Our revenue generated overseas amounted to RMB543.7 million, RMB469.2 million, RMB401.0 million, RMB311.8 million and RMB398.5 million, respectively, in 2022, 2023, 2024 and the nine months ended 30 September 2024 and 2025, accounting for 19.0%, 15.7%, 11.4%, 12.1% and 13.6% of our total revenue during the same periods. A large portion of our overseas revenue was generated from South Korea, Japan, SEA and Europe. The severity and frequency of international trade friction and disputes have increased in recent years. We cannot guarantee you that these countries will not strengthen their import policies or product certification requirements for lithium-ion battery separators in the future, which may have an adverse effect on our operations.

In recent years, complexities in international relations, such as the geopolitical tensions between the United States and China, have presented new challenges. In particular, on September 13, 2024, the Office of the United State Trade Representative announced a plan to raise the additional tariff rate applicable to U.S. imports of lithium-ion EV batteries and lithium-ion non-EV batteries from China, pursuant to Section 301 of the Trade Act of 1974, to 25%, effective from September 27, 2024 and January 1, 2026, respectively. Starting from March 4, 2025, the additional tariffs on imports from China imposed by the U.S.

government has been raised to 20%. On March 26, 2025, the U.S. government announced to impose a 25% tariff on automobiles and certain automobile parts imported from all countries pursuant to authority granted by Section 232 of the Trade Expansion Act of 1962. In April 2025, the U.S. government raised tariffs to 145% on all imports from China. In

the applicability of the Final Rule. Notably, President Trump issued the America Investment Policy Memorandum on 21 Februar

We are subject to customer concentration risk and the loss of, or a significant reduction in purchases from, any of our major customers would significantly reduce our profitability and materially and adversely affect our prospects, business, results of operations and financial condition.

During the Track Record Period, a majority of our lithium-ion battery separators were sold to a relatively limited number of customers, and we expect our customer concentration to remain at a relatively high level in the near future. Our key customers include LG Energy Solution, Samsung SDI, AESC, Murata, SK On, SAFT, CATL, BYD, Gotion High-tech, CALB, EVE Energy and Sunwoda. In 2022, 2023, 2024 and the nine months ended 30

policy could directly affect the profitability of the EV manufacturers in the short term and some of them may choose to pass down such increased costs to end customers, which may discourage end customers from choosing EVs, and thus affect the overall market demand of EV battery products and lithium-ion battery separators.

In addition, in the context of the national goal of becoming carbon neutral, the energy storage market in China has welcomed a series of favourable policies. For instance, Action Plan for Carbon Dioxide Peaking Before 2030 (2030), issued by the State Council in 2021, unveiled a series of action plans to accelerate energy storage development. As for ESS industry, on 23 July 2021, the National Development and Reform Commission (the "NDRC") and the National Energy Administration (the "NEA") issued the Guiding Opinions on Accelerating the Development of New Energy Storage (Fa Gai Neng Yuan Gui [2021] No. 1051) ( ) ([2021]1051), which set the goal of achieving a cumulative installation capacity of 30 GWh of ESS by 2025, and achieving the comprehensive market development of new energy storage by 2030. On 26 July 2021, the NDRC issued the Notice on Further Improvement of the Time-of-use Pricing Mechanism (Fa Gai Jia Ge [2021] No. 1093) ( ) ([2021]1093), which encouraged the use of ESS to reduce the power load in peak hours. On 21 December 2021, the NEA issued the Regulations on Power Grid Connection and Operations (Guo Neng Fa Jian Guan Gui [2021] No. 60) ( ) ([2021]60), which included electrochemical energy storage and other new energy storage into the management of grid-connected subjects. On 29 January 2022, the NDRC and NEA issued the "14th Five-Year Plan" New Energy Storage

Our historical performance may not be indicative of our future growth.

Our revenue increased by 4.0% from RMB2,866.7 million in 2022 to RMB2,981.9 million in 2023, further increased by 17.6% to RMB3,506.2 million in 2024, and increased by 13.7% from RMB2,577.8 million in the nine months ended 30 September 2024 to RMB2,931.6 million in the same period in 2025. However, our historical growth rates may not be indicative of our future growth, and we may not be able to maintain similar growth rates in the future. Our future growth is affected by a number of factors, such as macroeconomics, industrial policies, the demand of the downstream market, the overall industrial environment of the downstream market, technological advances and market competition. We cannot assure you that we will grow at the same rate as we have in the past, or at all.

We may face management risks arising from the expansion of our business.

Our business, results of operations and financial condition depend in part on our ability to effectively implement our expansion strategies. With our rapid development, the scale of our assets and income has continued to grow and is expected to further expand, will increase the responsibilities of our management. To effectively manage the expected growth of our operations and personnel, we will need to continue to improve our technological, operational and financial systems, policies, procedures and controls. There is

systems, procedures and control measures successfully or that our new business initiatives will be successful. If our management fail to properly manage the rapid expansion of our business, or our organisational structure and management system do not improve in line our expansion, our competitiveness may
risks caused by rapid expansion.

Unauthorised use of our intellectual property by third parties may harm our brand and reputation, materially and adversely affect our business, and we may incur substantial expenses to protect our intellectual property rights.

We regard our patents, trademarks and other intellectual properties as critical to our success. See "Business — Intellectual Property".

We have made advanced progress and attained a large number of R&D achievements since our inception. However, some of our R&D is still in the process of patent applications. We may face risks that our applications may be rejected. In addition, some of our proprietary technologies are non-patented technologies. If such technologies are leaked or violated, our business and financial conditions may be adversely affected.

In addition, we cannot assure you that these agreements will not be breached, that we will have adequate remedies to prevent any breach in time or at all, or that our proprietary technology, know-how or other intellectual property will not otherwise be disclosed to third parties. Costly and time-consuming litigation could be necessary to enforce and determine the scope of our proprietary rights, and failure to obtain or maintain trade secret protection could adversely affect our competitive position. See "Business — Legal Proceedings and Compliance".

Furthermore, our business partners may not always comply with our contract terms prohibiting the unauthorised use of our brands, images and other intellectual property rights. The agreements may not effectively prevent disclosure of confidential information and may not provide an adequate remedy in the event of unauthorised disclosurens86 .028339

Our manufacturing processes are potentially vulnerable to disruptions that can increase our production costs. We may experience potential disruptions in operations due to manufacturing difficulties or potential accidents.

Our manufacturing processes are complex, requiring equipment that is periodically modified and upgraded to improve manufacturing yields and product performance. From time to time, production difficulties may arise that could cause delivery delays or reduced output. There is no guarantee that we will not encounter manufacturing issues in achieving acceptable output or timely product delivery due to factors such as construction delays, challenges in upgrading or modifying existing production lines, building new plants, adapting to new manufacturing technologies or processes or delays in equipment deliveries. Any of these issues could constrain our production capacity and adversely affect our results of operations.

In addition, we may experience disruptions in our production lines due to additional factors such as labour shortages or natural disasters, which may delay our production and delivery, leading to sales loss, increased costs and damaged customer relationships. Any such event may adversely affect our business, results of operations, financial condition, and prospects.

We may be subject to liabilities associated with work-related accidents.

Our manufacturing processes entail certain risks, such as industrial accidents, which could lead to significant property damage or personal injury. Any such incident, regardless of its location, could result in substantial production interruptions and delays, or claims for significant damage due to personal injuries or property damage, thereby adversely

prechou

Work stoppages, increases in labour cost and other labour-related matters may have an adverse effect on our business.

We believe that we have a good working relationship with our employees. We have not experienced any material work stoppages, strikes or other major labour problems during the Track Record Period. However, there is no assurance that any of such events will not arise in the future. If our employees were to engage in a strike or other work stoppage, we could experience significant disruption of our operations and/or higher ongoing labour costs, which may have an adverse effect on our business, financial condition and results of operations.

In addition, labour costs in regions where we operate have been increasing in recent

We may be unable to obtain additional capital in a timely manner or on commercially acceptable terms, or at all. If we are unable to obtain adequate financing on terms satisfactory to us when we require it, our ability to continue to support our business growth could be significantly impaired, and our business and prospects may be adversely affected.

Fluctuations in exchange rates could have an adverse effect on the Group's results of operations.

A part of our business uses US dollar as the settlement currency. Our revenue generated overseas amounted to RMB543.7 million, RMB469.2 million, RMB401.0 million, RMB311.8 million and RMB398.5 million, respectively, in 2022, 2023, 2024 and the nine months ended 30 September 2024 and 2025, accounting for 19.0%, 15.7%, 11.4%, 12.1% and 13.6% of our total revenue during the same periods. In addition, we recorded net foreign exchange gains of RMB22.1 million, RMB1.0 million, RMB27.1 million and RMB6.9 million in 2022, 2023 and 2024 and the nine months ended 30 September 2024, respectively. We recorded net foreign exchange losses of RMB27.5 million for the nine months ended 30 September 2025, respectively. As we have expanded in, and expect to continue to explore, overseas markets, we are increasingly subject to risks associated with foreign exchange fluctuations.

Failure to maintain optimal inventory levels could increase our inventory hol(p)-4.2(p)-4.2(F)-469.8

negotiated with such customer and made full provision of ep09(our)-274.7(abi)-6ful

We may be exposed to liquidity risk due to a long cash conversion cycle.

We recorded relatively long trade and notes receivables turnover days, which may lead to delays in converting our revenue into cash. Our cash conversion cycle, a metric measuring how efficiently we manage its working capital by tracking the number of days it takes to convert our investments in inventory and other resources into cash flows from sales, was 139.8 days, 175.2 days, 223.1 days and 241.7 days in 2022, 2023, 2024 and the nine months ended 30 September 2025, respectively. The cash conversion cycle is calculated by adding average inventory turnover days and average trade and notes receivables turnover days, then subtracting average trade and notes payables turnover days. A long cash conversion cycle may increase our reliance on working capital or external financing to support our operations and growth. If we are unable to manage our inventory and receivables efficiently or to secure adequate financing on acceptable terms, our liquidity position, financial condition, and results of operations could be materially and adversely affected.

Our financial results may be affected by government grants.

We recorded government grants of RMB27.9 million, RMB101.8 million, RMB84.5 million, RMB83.2 million and RMB81.4 million for the years ended 31 December 2022, 2023, 2024 and the nine months ended 30 September 2024 and 2025, respectively. Not all of those grants are recurring in nature. The aforementioned grants we received are uncertain and subject to certain criteria and procedures stipulated by local governments. In addition, the development focus of local governments may shift to other industries over time. We cannot assure you that we will be able to receive any such grants in the future. If we are unable to receive future grants at the same level as we received during the past, or at all, our profitability for the period may be adversely affected.

We are exposed to credit risks related to our trade receivables.

We generally grant credit periods within 180 days to our customers. Our trade and notes receivables amounted to RMB1,492.3 million, RMB1,773.2 million, RMB2,376.1 million and RMB2,558.1 million as at 31 December 2022, 2023 and 2024, and 30 September 2025, respectively. In 2022, 2023, 2024 and the nine months ended 30 September 2025, our average trade and notes receivables turnover days amounted to 168.9 days, 204.4 days, 223.6 days and 234.5 days, respectively. Although our major customers are well-known players in the lithium-ion battery industry with good reputations, and we have established a.3(our)]TJ T

If we are unable to collect our trade receivables from our customers in a timely manner per contractual terms or at all, or if there are any material delays in payment by our customers, our liquidity and cash management will be materially and adversely affected, which, in turn, might affect our business, financial condition and results of operation.

Impairment losses of prepayments, other receivables and other assets would adversely affect our business, financial performance and results of operations.

Our prepayments, other receivables and other assets mainly consisted of (i) prepayment for acquisition of non-current assets, mainly relating to prepayments for acquisition of equipment for our manufacturing, (ii) VAT recoverable, (iii) prepayments for materials and others, mainly relating to raw materials, and (iv) other receivables, mainly relating to lease deposits. As at 31 December 2022, 2023, 2024 and 30 September 2025, our prepayment, other receivables and othe

management time and resources to resolving any deficiencies. We may also experience negative publicity arising from such deficiencies, which may adversely affect our business and financial performance.

Failure to comply with environmental, fire control, and health and safety laws and regulations may subject us to fines or penalties or incur costs that could materially and adversely affect the success of our business.

We are subject to a number of environmental, fire control, health and safety laws and regulations, including, but not limited to, the treatment and discharge of pollutants into the environment during our business operations. See "Regulatory Overview". In addition, our production lines can only be put into production after the requirements of the relevant administrative authorities in charge of environmental protection, fire control, and health and safety in China have been met. We may be subject to rectification orders, fines, potentially monetary damages, or production suspensions in our business operations if we fail to meet requisite requirements within the time limit. During the Track Record Period, we were not subject to major administrative penalties due to violation of relevant environmental protection, fire control, and health and safety laws and regulations. Delays or failures in obtaining all the requisite regulatory approvals or having duly organised the relevant completion acceptance of such facilities may affect our ability to develop, manufacture and commercialise our products as planned. As such laws and regulations may evolve, we may not be able to comply with, or accurately predict any potential substantial cost of complying with, these laws and regulations. If we fail to comply with relevant laws and regulations, we may be subject to rectification orders, fines, potentially monetary damages, or production suspensions in our business operations. In addition, we cannot fully

maximum level as from time to time prescribed by local authorities. During the Track Record Period and up to the Latest Practicable Date, although we have not made contributions based on the employee's actual salary level, we have not received any notice requiring us to pay any outstanding social insurance and housing provident fund contributions, nor have we been subject to any administrative action or penalty by the relevant regulatory authorities with respect to our social insurance and housing provident fund contributions. As advised by our PRC Legal Advisor, based on the interviews with relevant competent government authorities, assuming that there is no material pending employee claims or material change to current PRC laws and regulations and the practice in policy implementation and inspection of localgovernments, the likelihood that we would be required by relevant authorities to pay all shortfall and late fees for social insurance and housing provident fund contributions and/or be subject to material administrative penalties due to failure to make full contributions is remote.

Any negative publicity regarding our Company, Directors, employees or products, regardless of its veracity, could adversely affect our business.

Our image is sensitive to the public's perception of us as a business in its entirety, which includes not only the quality and competitiveness of our products, but also our corporate management and culture. We cannot guarantee that no one will, intentionally or otherwise, distribute information about us, especially information regarding the quality of our products or our internal management matters, that may result in a negative perception of us by the public. Any negative publicity about our Company, Directors, employees or products, regardless of veracity, could lead to potential loss of customers or difficulty in retaining or recruiting talent that are essent

- diversion of our management's attention and resources from our existing business in the pursuit of such acquisition;

- frictions in the assimilation of operations, talents, intellectual property and products of an acquired business; and

- loss of key personnel and business relationships as a result of such acquisition.

We may also in the future enter into strategic cooperation with various third parties. Strategic cooperation with third parties could subject us to a number of risks, including:

- disclosure or misappropriation of proprietary information;

- defaults including breach of covenants, non-performance by the counterparty; and

- negative publicity related to these third-parties or such strategic cooperation.

If we fail to address the risks related to our future acquisitions, investments and strategic cooperation, we may not be able to realise the anticipated benefits and our reputation, business, financial condition and results of operations may be adversely affected.

We are exposed to risks relating to the retention of our senior management.

The composition and continued commitment of our senior man726 TDc726 TDc7268steat-64neso

reputation and future recruiting efforts. In addition, our ability to train and integrate new employees into our operations may not meet the demands of our growing business. Any of the above issues related to our workforce may materially and adversely affect our operations and future growth.

We rely on third parties to provide logistics services for our business. If these third parties fail to provide reliable and timely services, our business, financial condition and results of operations may be adversely affected.

We rely on third-party service providers for some services in connection with our business, such as logistics. We obtain services from third-party service providers who we believe are able to meet our requirements. However, the services provided by any of the third-party service providers may not be provided in a timely manner and the services provided by them may not be of satisfactory quality. If the third-party service providers do not perform satisfactorily, substantially reduce the amount and scope of their services, substantially increase the prices of their services or terminate their business relationship with us, we may need to replace the third-party service providers or take other remedial

RISKS RELATING TO WHERE WE CONDUCT BUSINESS

Changes in the economic, political or social conditions or government policies in the countries and regions where we operate could affect our business, financial condition and results of operations.

A substantial part of our assets and operations are located in China. In addition, we operate our business in a number of other geographic markets globally. Accordingly, our business, financial condition and results of operations could also be influenced by political, economic and social conditions in these markets. Economic growth in each of our geographic markets has been uneven, both geographically and among various sectors within any one of the relevant economies. Any economic downturn, whether actual or perceived, further decrease in economic growth rates or an otherwise uncertain economic outlook in our geographic markets or any other market in which we may operate could affect our business, financial condition and results of operations. Changes in the economic or political environment could increase our costs, increase our exposure to legal and business risks, disrupt our operations and affect our results of operations.

We may be subject to the approval or other requirements of the China Securities Regulatory Commission or other PRC governmental authorities in connection with future security activities.

As the PRC laws and regulations in relation to overseas [REDACTED] and [REDACTED] of shares develop, we may be required to make filings with or report to CSRC or other PRC regulatory authorities for our future capital raising activities. On 17 February 2023, the CSRC promulgated the Trial Administrative Measures of Overseas Securities Offering and Listing by Domestic Companies (

) (the "Archives Rules"), which came into effect on 31 March 2023. The Archives Rules require that, in relation to the overseas securities [REDACTED] and [REDACTED] activities of domestic enterprises, either in direct or indirect form, such domestic enterprises, as well as securities companies and securities service institutions providing relevant securities services, are required to strictly comply with relevant requirements on confidentiality and archives management, establish a sound confidentiality and archives system, and take necessary measures to implement their confidentiality and archives management responsibilities. Any failure to comply with Archives Rules may materially and adversely affect our business, results of operations, financial conditions and prospects.

We are closely monitoring how they will affect our operations and our future financing. In addition, if the CSRC or other PRC regulatory authorities in the future promulgate new rules or explanations imposing further requirements that we obtain their approvals or complete the required filing or other regulatory procedures for this [REDACTED] or future capital raising activities, there can be no assurance that we will be able to obtain a waiver of such requirements, if and when procedures are established to obtain such a waiver. Any unforeseen situations or negative publicity regarding such approval, filing or other requirements could materially and adversely affect our business, financial condition, prospects and the trading price of our Shares.

Development in the legal system of certain geographic markets in which we operate could materially and adversely affect us.

Legal systems of the geographic markets where we operate vary significantly from jurisdiction to jurisdiction. Some jurisdictions have a civil law system based on written statutes and others are based on common law. Unlike the common law system, prior court decisions under the civil law system may be cited for reference but have limited precedential value.

The legal systems of some geographic markets where we operate are consistently evolving. Laws and regulations that are recently enacted may not sufficiently cover all aspects of economic activities in such markets. In particular, the interpretation and enforcement of these laws and regulations are subject to future implementations, and the application of some of these laws and regulations to our businesses is not settled. Since local administrative and court authorities are authorised to interpret and implement statutory provisions and contractual terms, it may be difficult to evaluate the outcome of administrative and court proceedings and the level of legal protection we have in many of the geographic markets where we operate. Local courts may have discretion to reject enforcement of foreign awards or arbitration awards.s.waint-5.9(n)e-403.1(ory)-427.9(a)-3.8(5(ec)-5.5

treatment or increases in our effective tax rate due to any other reasons, our tax liability would increase correspondingly. In addition, regulations on income, withholding, value-added, and other taxes are subject to be amended or restated. Non-compliance with the tax laws and regulations in mainland China may also result in penalties or fines imposed by relevant tax authorities. Adjustments or changes to tax laws and regulations in mainland China and tax penalties or fines could affect our businesses, financial condition and results of operations.

Holders of our H Shares may be subject to PRC income tax obligations.

Under the current PRC tax laws and regulations, non-PRC resident individuals and non-PRC resident enterprises are subject to different tax obligations with respect to the dividends paid to them by us and the gains realised upon the sale or other disposition of H Shares by them. Non-PRC resident individuals are required to pay PRC individual income tax at a 20% rate for the dividends or gain from share transfer derived in China under the

the relevant non-PRC resident enterprise. Despite the arrangements mentioned above, the

RISKS RELATING TO THE [REDACTED]

We will be concurrently subject to [REDACTED] and regulatory requirements of mainland China and Hong Kong.

As we are listed on the Shenzhen Stock Exchange and will be [REDACTED] on the Main Board in Hong Kong, we will be required to comply with the listing rules (where applicable) and other regulatory regimes of both jurisdictions, unless an exemption is available or a waiver has been obtained. Accordingly, we may incur additional costs and resources in continuously complying with all sets of listing rules in the two jurisdictions.

The characteristics of the A share and H share markets may differ.

Our A Shares are listed and traded on the Shenzhen Stock Exchange. Following the [REDACTED], our A Shares will continue to be traded on the Shenzhen Stock Exchange

The liquidity, [REDACTED] and market price of our H Shares may be subject to significant volatility in response to various factors beyond our control, including the general market conditions of securities in Hong Kong and elsewhere in the world.

The price and [REDACTED] of our H Shares may be subject to significant volatility in response to various factors beyond our control, including the general market conditions of securities in Hong Kong and elsewhere in the world. In particular, the business and performance and the market price of the shares of other companies engaging in similar business may affect the price and [REDACTED] of our H Shares. In addition to market and industry factors, the price and [REDACTED] of our H Shares may be highly volatile for specific business reasons, such as fluctuations in our revenue, earnings, cash flows and investments, changes in our pricing policies and expenditures, regulatory developments, demand for our services, unexpected business interruptions resulting from natural disasters or power shortages, our ability to obtain or maintain regulatory approval for our operations, relationships with our suppliers, movements or activities of key personnel, or actions taken by competitors. Moreover, shares of other companies listed on the Stock Exchange with significant operations and assets in China have experienced price volatility and fluctuations in trading volume in the past, and it is possible that our H Shares may be subject to fluctuations in [REDACTED] and [REDACTED] not directly related to our performance but related to the overall political and economic conditions in Hong Kong, the PRC or elsewhere in the world.

Our historical dividends may not be indicative of our future dividend policy, and there can be no assurance whether and when we will pay dividends in the future.

Our historical dividends may not be indicative of our future dividend policy. We cannot guarantee when and in what form dividends will be paid on our H Shares following the [REDACTED]. The declaration of dividends is proposed by the Board and is based on, and limited by, various factors, including without limitation, our business and financial performance, capital and regulatory requirements, and general business conditions. We may not have sufficient or any profits to enable us to make dividend distributions to our Shareholders in the future, even if our financial statements indicate that our operations have been profitable. See "Financial Information — Dividend Policy" for more details.

You should not place any reliance on any information released by us in connection with the listing of our A Shares on the Shenzhen Stock Exchange.

As our A Shares are listed on the Shenzhen Stock Exchange, we have been subject to periodic reporting and other information disclosure requirements in China. As a result, from time to time, we publicly release information relating to us on the Shenzhen Stock Exchange or other media outlets designated by the CSRC. However, the information announced by us in connection with our A Shares listing is based on regulatory requirements of the securities authorities, industry standards and market practices in China, which are different from those applicable to the [REDACTED]. The presentation of financial and operational information for the Track Record Period disclosed on the Shenzhen Stock Exchange or other media outlets may not be directly comparable to the financial and operational information contained in this Document. Therefore, prospective

[REDACTED] in our H Shares should be reminded that, in making their [REDACTED]

Certain facts, forecast and other statistics in this Document obtained from publicly available sources have not been independently verified and may not be reliable.

Certain facts, forecast and other statistics in this Document are derived from various

INFORMATION ABOUT THIS DOCUMENT AND THE [REDACTED]

[REDACTED]

INFORMATION ABOUT THIS DOCUMENT AND THE [REDACTED]

[REDACTED]

INFORMATION ABOUT THIS DOCUMENT AND THE [REDACTED]

[REDACTED]

INFORMATION ABOUT THIS DOCUMENT AND THE [REDACTED]

[REDACTED]

INFORMATION ABOUT THIS DOCUMENT AND THE [REDACTED]

[REDACTED]

In preparation for the [REDACTED], we have sought the following waivers from strict

(b) pursuant to Rule 3.20 of the Listing Rules, each Director will provide his/her contact information (including telephone number, mobile phone number and/or

(c) a certified public accountant as defined in the Professional Accountants Ordinance (Chapter 50 of the Laws of Hong Kong).

Note 2 to Rule 3.28 of the Listing Rules further provides that the Stock Exchange considers the following factors in assessing the "relevant experience" of the individual:

(a) length of employment with the issuer and other issuers and the roles he/she played;

(b) familiarity with the Listing Rules and other relevant laws and regulations including the SFO, the Companies Ordinance, the Companies (Winding Up and Miscellaneous Provisions) Ordinance and the Takeovers Code;

(c) relevant training taken and/or to be taken in addition to the minimum requirement under Rule 3.29 of the Listing Rules; and

(d) professional qualifications in other jurisdictions.

Pursuant to Chapter 3.10 under the Guide for New Listing Applicants (the "Guide") published by the Stock Exchange, the Stock Exchange will consider a waiver application by an issuer in relation to Rules 3.28 and 8.17 of the Listing Rules based on the specific facts and circumstances. Factors that will be considered by the Stock Exchange include:

(a) whether the issuer has principal business activities primarily outside Hong Kong;

(b) whether the issuer was able to demonstrate the need to appoint a person who does not have the Acceptable Qualification nor Relevant Experience (both as defined under paragraph 11 of Chapter 3.10 under the Guide) as a company secretary; and

(c) why the directors consider the individual to be suitable to act as the issuer's company secretary.

Further, pursuant to paragraph 13 of Chapter 3.10 under the Guide, such waiver, if granted, will be for a fixed period of time (the "Waiver Period") and on the following conditions:

(a) the proposed company secretary must be assisted by a person who possesses the qualifications or experience as required under Rule 3.28 of the Listing Rules and is appointed as a joint company secretary throughout the Waiver Period; and

(b) the waiver can be revoked if there are material breaches of the Listing Rules by the issuer.

Our Company has appointed Mr. Li Sheng ("Mr. Li ") as one of our joint company secretaries. Mr. Li has extensive experience in board and corporate management matters but presently does not possess any of the qualifications under Rules 3.28 and 8.17 of th2(y)-38 Listing Rules, and may not be able to solely fulfil the requirements of the Listing Rules. Therefore, we have appointed Ms. Jian Xuegen ("Ms. Jian

WAIVERS AND EXEMPTIONS FROM STRICT COMPLIANCE WITH THE LISTING RULES AND THE COMPANIES (WINDING UP AND MISCELLANEOUS PROVISIONS) ORDINANCE

CONTINUING CONNEC TED TRANSACTIONS

We have entered into and will continue to engage in certain transactions which would potentially constitute continuing connected transactions for our Company under the Listing Rules following completion of the [REDACT ED]. We have applied to the Stock Exchange for, and the Stock Exchange [has granted] us, waivers from strict compliance with certain requirements set out in Chapter 14A of the Listing Rules for certain continuing connected transactions. For further details of such potential partially-exempt and non-exempt continuing connected transactions and the waivers, please see "Connected Transactions".

[REDACTED]

WAIVERS AND EXEMPTIONS FROM STRICT COMPLIANCE WITH THE LISTING RULES AND THE COMPANIES (WINDING UP AND MISCELLANEOUS PROVISIONS) ORDINANCE

[REDACTED]

WAIVERS AND EXEMPTIONS FROM STRICT COMPLIANCE WITH THE LISTING RULES AND THE COMPANIES (WINDING UP AND MISCELLANEOUS PROVISIONS) ORDINANCE

[REDACTED]

WAIVERS AND EXEMPTIONS FROM STRICT COMPLIANCE WITH THE LISTING RULES AND THE COMPANIES (WINDING UP AND MISCELLANEOUS PROVISIONS) ORDINANCE

[REDACTED]

WAIVERS AND EXEMPTIONS FROM STRICT COMPLIANCE WITH THE LISTING RULES AND THE COMPANIES (WINDING UP AND MISCELLANEOUS PROVISIONS) ORDINANCE

[REDACTED]

WAIVERS AND EXEMPTIONS FROM STRICT COMPLIANCE WITH THE LISTING RULES AND THE COMPANIES (WINDING UP AND MISCELLANEOUS PROVISIONS) ORDINANCE

[REDACTED]

DIRECTORS AND PARTIES INVOLVED IN THE [REDACTED]

DIRECTORS

Name	Address	Nationality
Executive Directors		
Prof. Chen Xiufeng ( )	Room 13B02, Building 2 Longqin Peninsula Garden No. 63, Gaoxin South Ring Road Nanshan District Shenzhen, Guangdong PRC	Chinese
Dr. ZHANG XIAOMIN	Apartment 1203 Xingyuan Advanced Materials Industrial Park Shenzhen, Guangdong PRC	United States
Mr. Xu Liqiang ( )	Room 2901, No.6 Huarun Xingfuli Binhu District Wuxi, Jiangsu PRC	Chinese
Non-executive Director		
Mr. Zhu Bide ( )	Room 11–706, Phase 1 Haiyue Garden Nanshan District Shenzhen, Guangdong PRC	Chinese

Name	Address	Nationality
Independent non-executive Directors		
Mr. Tang Changjiang ( )	Room 1001, Unit B Building 10, Lingyu Huafu Linghangcheng Hangcheng Avenue Baoan District Shenzhen, Guangdong PRC	Chinese
Dr. Lin Zhiwei ( )	2/F, Shum Yip Center Building 5045 Shennan East Road Luohu District Shenzhen, Guangdong PRC	Chinese
Ms. Sun Zhenzhen ( )	No. 2–912, Xinyi Lingyu Xin'an Street Bao'an District Shenzhen, Guangdong PRC	Chinese

DIRECTORS AND PARTIES INVOLVED IN THE [REDACTED]

PARTIES INVOLVED IN THE [REDACTED]

Sole Sponsor	China Securities (International) Corporate Finance Company Limited 18/F, Two Exchange Square 8 Connaught Place Central Hong Kong
[REDACTED]	[REDACTED]
[REDACTED]	[REDACTED]

As to PRC law
King & Wood Mallesons
28/F, China Resources Tower
2666 Keyuan South Road
Nanshan District
Shenzhen, Guangdong
PRC

As to U.S. law
Miller, Canfield, Paddock and Stone, P.L.C.
840 W. Long Lake Road, Suite 150
Troy, Michigan
U.S.

As to Malaysian law
PHANG THAM TEOH & CO
S–15–02, Wisma YNH, Kiara
163, No. 8, Jalan Kiara, 50480
Mont Kiara, Kuala Lumpur
Malaysia

As to Swedish law
Wigge & Partners Advokat KB
Birger Jarlsgatan 25
111 45 Stockholm
Sweden

As to Swedish law in respect of environmental matters
FRÖBERG & LUNDHOLM ADVOKATBYRA AB
Olof Palmes gata 23
111 22 Stockholm
Sweden

DIRECTORS AND PARTIES INVOLVED IN THE [REDACTED]

Legal Advisors to the Sole Sponsor and the [REDACTED]	As to Hong Kong law and U.S. laws Sidley Austin 39/F, Two International Finance Centre 8 Finance Street Central Hong Kong As to PRC law Zhong Lun Law Firm 57/58/59/F, Tower A, Ping An Finance Centre, 5033 Yitian Road Futian District Shenzhen, Guangdong PRC
Auditor and Reporting Accountants	Rongcheng (Hong Kong) CPA Limited Certified Public Accountants Registered Public Interest Entity Auditor Unit 4301–07, 43/F, COSCO Tower 183 Queen's Road Central Hong Kong
Industry Consultant	Frost & Sullivan(Beijing) Inc., Shanghai Branch Co. Wheelock Square 25/F, Suite 2504–2505 1717 Nanjing West Road Jing'An District Shanghai 200040 PRC
Compliance Advisor	Goldlink Capital (Corporate Finance) Limited 28/F, Bank of East Asia Harbour View Centre 56 Gloucester Road Wanchai Hong Kong
[REDACTED]	[REDACTED]

CORPORATE INFORMATION

Registered office and headquarter	Tianyuan Road Gongming Town Guangming District Shenzhen, Guangdong PRC
Principal place of business in Hong Kong	40/F, Dah Sing Financial Centre No. 248 Queen's Road East Wan Chai Hong Kong
Company's Website	www.senior798.com (The information contained in this website does not form part of this document)
Joint company secretaries	Mr. Li Sheng C1–5E, Cuihai Garden Nongyuan Road Futian District Shenzhen, Guangdong PRC Ms. Jian Xuegen (member of Hong Kong Institute Certified Public Accountants and PRC Institute Certified Public Accountants) 40/F Dah Sing Financial Centre No. 248 Queen's Road East Wan Chai Hong Kong
Authorised representatives	Dr. ZHANG XIAOMIN Apartment 1203 Xingyuan Advanced Materials Industrial Park Shenzhen, Guangdong PRC Ms. Jian Xuegen (member of Hong Kong Institute Certified Public Accountants and PRC Institute Certified Public Accountants) 40/F, Dah Sing Financial Centre No. 248 Queen's Road East Wan Chai Hong Kong

CORPORATE INFORMATION

Audit Committee	Dr. Lin Zhiwei (Chairperson) Mr. Tang Changjiang Mr. Zhu Bide
Remuneration and Appraisal Committee	Mr. Tang Changjiang (Chairperson) Dr. Lin Zhiwei Mr. Xu Liqiang
Nomination Committee	Ms. Sun Zhenzhen(Chairperson) Mr. Tang Changjiang Dr. ZHANG XIAOMIN
Strategy and Development Management Committee	Prof. Chen Xiufeng (Chairperson) Mr. Tang Changjiang Ms. Sun Zhenzhen
[REDACTED]	[REDACTED]
Principal Bank	Industrial and Commercial Bank of China Limited Shenzhen Yantian Branch No.99, Jinrong Road Yantian District Shenzhen, Guangdong PRC

The information and statistics set out in this section and other sections of this document were extracted from the Frost & Sullivan Report, which was commissioned by us, and from various official government publications and other publicly available publications. We engaged Frost & Sullivan to prepare the Frost & Sullivan Report, an independent industry report, in connection with the [REDACTED]. We believe that the sources of this information are appropriate sources for such information and have taken reasonable care in extracting and reproducing such information. We have no reason to believe that such information is false or misleading or that any fact has been omitted that would render such information false or misleading. The information from official government sources has not been independently verified by us, the Sole Sponsor, [REDACTED], any of their respective directors and advisors, or any other persons or parties involved in the [REDACTED], and no representation is given as to its accuracy.

SOURCE OF INFORMATION

We commissioned Frost & Sullivan to conduct market research on battery separator industry and prepare the Frost & Sullivan Report. Frost & Sullivan is an independent global consulting firm founded in 1961 in New York that offers industry research and market strategies. We have contracted to pay RMB380,000 to Frost & Sullivan for compiling the Frost & Sullivan Report.

ng interviews with relevant parties. Frost & Sullivan also
arch which involved reviewing company reports, independent
ased on its own research database. Frost & Sullivan obtained the
otal market size from historical data analysis plotted against

OVERVIEW OF GLOBAL AND CHINA LITHIUM-ION BATTERY INDUSTRY

Definition and Classifications

Lithium-ion battery is a type of rechargeable battery that achieves its charging and discharging process through the flow of lithium ions between the cathode and anode. In comparison to rechargeable alkaline battery, lithium-ion battery offers higher energy density, longer life cycle, and better safety performance. According to application scenarios, lithium-ion battery can primarily be classified into three major categories: electric vehicle battery, energy storage battery, and consumer electronics battery, which are primarily applied for transportation vehicles, energy storage facilities, consumer electronics and industrial machinery.

In addition to these core segments, lithium-ion battery is also increasingly being adopted in emerging applications such as electric tools, unmanned aerial vehicles, robotics, electric aviation and marine electrification. These sectors are expected to become important growth engines for the battery industry, supported by the global shift toward electrification, automation, and lightweight energy solutions. The rapid expansion of lithnsaur-5.5-37 3.8(ddddddddd1.4

market. The lithium-ion battery shipments from other regions outside China is expected to reach over 2,000 GWh by 2029, representing a CAGR of 39.4%, which is higher than that in China, and increasing to over 40% share of the global market.

Notably, driven by the continued penetration of NEVs and the rapid adoption of energy storage including for user side, Europe and the U.S.'s market share in term of lithium-ion battery by shipment volume is expected to increase from 9.9% and 7.0% in 2024 to 20.3% and 17.0% in 2029, respectively. In response, leading lithium-ion battery manufacturers are actively expanding production capacity in Europe and the U.S., which in turn drives the global lithium-ion battery supply chain including the battery separator industry to accelerate their expansion and localization in these regions.

Market Size of Global and China EV Battery Industry

Global NEV sales grew from approximately 3.2 million units in 2020 to 19.0 million in 2024, representing a CAGR of 56.5%, with China accounting for 67.8% of global sales at 12.9 million units. As consumer acceptance continues to rise, global NEV sales are projected to reach 40.7 million units by 2029, growing at a CAGR of 16.5% from 2024. China is expected to maintain its leading position, with sales reaching 27.7 million units by 2029, representing 68.1% of global NEV sales.

The rapid expansion of the NEV market has significantly boosted demand for EV batteries. Global EV battery shipments rose from approximately 177.6 GWh in 2020 to 1,037.8 GWh in 2024, achieving a CAGR of 55.5%. Going forward, the global EV battery shipment volume is expected to grow from 1,037.8 GWh in 2024 to 3,369.9 GWh in 2029 at a CAGR of 26.6% In China, EV battery shipments surged from 80.0 GWh in 2020 to 783.5

by 2029, growing at a CAGR of 13.5% from 2024. From other regions outside China, energy storage battery shipments are expected to reach over 500 GWh in 2029, representing a CAGR of 56.8% from 2024.

Market Size of Global and China Consumer Electronics Battery Industry

Consumer electronics, including smartphones, tablets, laptops, wearables, and AR/VR devices, have seen stable demand driven by advances in mobile internet, IoT, AI, and rising disposable income. Global shipment volume increased from 2,178.2 million units in 2020 to 2,193.2 million units in 2024, representing a CAGR of approximately 0.2%, and is expected to reach over 2,700 million units in 2029. Similarly, the market size by shipment volume of consumer electronic products in China increased from 519.8 million units in 2020 to 525.4 million units in 2024, representing a CAGR of approximately 0.3%. Looking ahead, growing demand for smartphone upgrades and deeper AI integration in devices is expected to boost market growth, with China's shipments forecast to reach 761.5 million units by 2029, maintaining a 27.6% share of global volume.

The global consumer electronics battery market grew modestly from 89.3 GWh in 2020 to 91.4 GWh in 2024 with a CAGR of 0.6%, but is expected to expand more robustly to 128.0 GWh by 2029 with a CAGR of 7.0% from 2024 as products become more intelligent, compact, and multifunctional. In China, consumer electronics battery shipments rose from 31.0 GWh in 2020 to 33.7 GWh in 2024 at a CAGR of 2.1% and are projected to reach 49.0 GWh by 2029 representing a CAGR of 7.8% from 2024, driven by 5G adoption and the broader use of AR/VR devices.

OVERVIEW OF GLOBAL AND CHINA BATTERY SEPARATOR INDUSTRY

Definition and Classifications

A battery separator is a type of polymeric membrane. As an indispensable component of lithium-ion batteries, separators prevent electrical short circuits and provide a pathway for lithium ions to move between cathode and anode, thus having a significant impact on the performance of lithium-ion battery products.

Separators can be classified into dry process separators and wet process separators. Dry process separators are generally made of polypropylene (PP) or polyethylene (PE). Due to the relatively high shut-down point and low thermal shrinkage rate, dry process separators have a higher thermal stability, which ensures a better safety performance. Wet

consumh-33-t(mn 3(tur9m)to)]7hipment5.7(331.6(is)-25wh34.7(3701.6(n)-342(p)-714(h)-2)]Titi48.3(ss)

and performance demands of high-energy-density battery applications, whereas around 20% of dry process separators are coated, consistent with their broader use in cost-sensitive and moderate-performance applications. This distribution underscores the critical role of coating in enabling wet process separators to meet advanced battery performance requirements.

Value Chain Analysis

Major upstream suppliers in the battery separator industry encompass raw material suppliers and equipment manufacturers. Raw material suppliers provide materials such as polyethylene (PE), polypropylene (PP), additives, packaging and auxiliary production materials, while the equipment suppliers provide machineries and tools. The leading battery separator manufacturers with in-house design capability equipment for both dry and wet process separators that is highly compatible with their proprietary production techniques, which will enable them to produce high-quality separators with high level of precision and production efficiency. Separators are crucial to the batteries not only because they prevent short circuits, but they also act as last resorts that shut off the flow of lithium-ions if the battery overheats and explodes. Leading battery separator manufacturers at the midstream offer dry and wet process separators and also conduct coating process based on demands from customers, which enhances thermal shutdown capability, safety performance, and compatibility with battery chemistries. The battery separators are applicable to lithium-ion batteries for a wide range of application scenarios, including new energy vehicles, electrical energy storage facilities, consumer electronics, etc.

Market Size of Global and China Battery Separator Industry

The market size of global battery separator market by shipment volume increased from 6.4 billion m^2 in 2020 to 27.7 billion m^2 in 2024 at a CAGR of 44.5%. In 2024, China had the largest shipment volume of battery separator in the world, accounting for around 84.0% of the market in major countries. Going forward, driven by the additional government mandates and technological advancements, it is forecasted that the market size of global battery separator market by shipment volume will increase from 27.7 billion m^2 in 2024 to 84.1 billion m^2 in 2029, representing a CAGR of 24.8%. Meanwhile, driven by the rapid increase in local lithium-ion battery and separator production capacities in Europe and the U.S., supported by rising NEV penetration in both regions and high annual growth in energy storage installations, regional manufacturers are accelerating local production to enhance supply chain resilience, shorten logistics cycles, reduce transportation costs, and meet increasingly stringent local requirements for quality, sustainability, and traceability. Geopolitical uncertainties and the growing emphasis on supply chain security are further strengthening the motivation for onshore production. At the same time, closer collaboration between material suppliers, battery producers, and downstream users is improving efficiency and enabling faster product innovation. Together with the overseas expansion of leading Chinese separator companies to support globalised battery supply chains, these forces are expected to significantly increase the shipment share outside China

The global wet process battery separator market by shipment volume grew from approximately 5.1 billion m^2 in 2020 to about 21.3 billion m^2 in 2024, at a CAGR of 42.7%. In 2024, China dominated the market with an 80.8% share. Moving forward, the market is projected to expand from 21.3 billion m^2 in 2024 to 70.4 billion m^2 in 2029, at a CAGR of 27.0%. Notably, the market share outside China is expected to rise from 19.2% in 2024 to 38.0% in 2029 with a CAGR of 45.5%, driven by accelerated demand growth in international markets as well as Chinese enterprises' strategic overseas expansion. Leveraging their advanced manufacturing technologies, strong research capabilities, and integrated supply chains, Chinese companies are rapidly establishing production bases abroad to efficiently meet growing global battery demand, enhance supply chain resilience, and maintain cost competitiveness, thereby reinforcing their leading position in the global wet process battery separator market.

Global Wet Process Battery Separator Industry by Shipment Volume, 2020–2029E

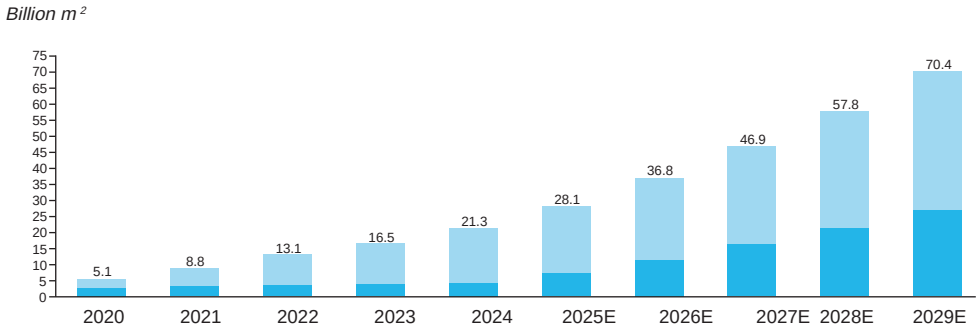

Dry Process Battery Separators from China by Shipment Volume, 2020–2029E

	CAGR 2020–2024	CAGR 2024–2029E
China Dry Process Battery Separator Industry	57.2%	14.1%

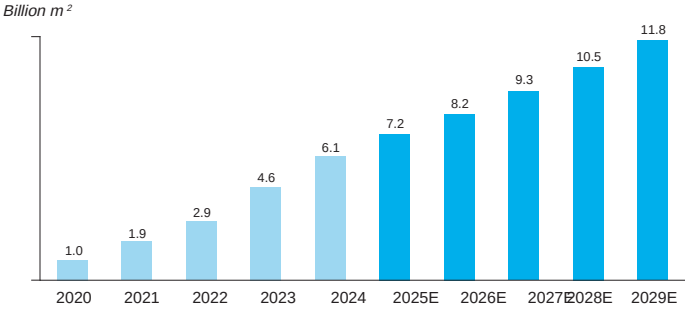

Thus, at the global level, separator capacity grew from 9.0 billion m^2 in 2020 to 43.8 billion m^2 in 2024, registering a CAGR of 48.5%, with shipments rising from 6.4 billion m^2 to 27.7 billion m^2 at a CAGR of 44.5%. By 2029, global capacity is projected to reach 93.5 billion m^2 and shipments 84.1 billion m^2, reflecting CAGRs of 16.4% and 24.8% from 2024, supporting a more balanced and resilient global supply network while responding to the rapidly growing demand across the battery value chain worldwide.

Battery Separator from China by Production Capacity and Shipment Volume, 2020–2029E

Battery Separator from Other Regions outside China by Production Capacity and Shipment Volume, 2020–2029E

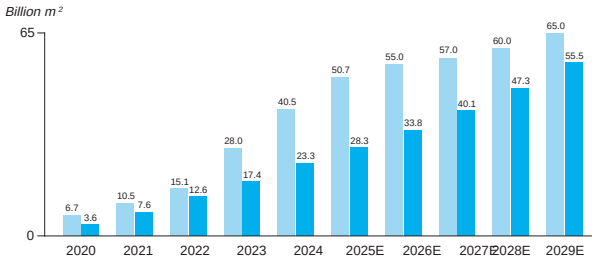

and portable systems. Separator manufacturers are responding by developing customised, scenario-specific solutions, including functional coatings, optimised porosity, and enhanced thermal shutdown properties. Among these, energy storage industry in Europe and the U.S. especially for user-side grew significantly and their market size by added installed capacity is expected to exceed 140 GW in Europe and 200 GW in the U.S. by 2029, representing CAGRs of 39.4% and 40.0% from 2024 to 2029, respectively. This rapid growth is driving increased lithium-ion battery demand in Europe and the U.S., and in turn accelerating overseas separator capacity expansion to meet rising local demand. As global investments in renewable energy and grid stability increase, the energy storage battery industry is rising rapidly, creating a growing, sustainable demand base for separators in the energy storage sector.

Rising Competitiveness of Chinese Suppliers

Chinese separator manufacturers have rapidly caught up with, and in many cases surpassed, international competitors in terms of production scale, technology maturity, and cost efficiency. Through continued investment in research and development and production capacity, Chinese players are now leading global separator supply. Their competitive pricing and ability to deliver large volumes of high-quality wet and dry process separators have made them dominant exporters, especially to EV battery producers in Europe and SEA. This increasing competitiveness has reshaped the global market structure and consolidated leading position of Chinese suppliers.

Innovations Benefitting Leading Enterprises with Diverse Layouts

separator manufacturers, through their rich industry experience, establish important expertise for the entire production process. The expertise includes the selection of raw materials and design and final production of battery separators. Pioneers in the battery separator industry have simultaneously mastered process and equipment technologies in dry and wet process separator production. To further extend their leading positions, separator manufacturers have collaborated with renowned universities and research institutions to develop cutting-edge technologies, which makes it challenging for new entrants to enter into the battery separator industry.

High-calibre talents

The high-calibre talents with extensive professional knowledge, deep industry understanding and rich experience play an important role in the success of battery separator manufacturers. Battery separator manufacturers with a proven track record in the industry normally have built-up high technical research teams. Besides, an experienced and

Flexible supply configuration capability

Excellent production capability is also one ofthe entry barriers for battery separator industry since it is an indication of operational efficiency, production flexibility, and long-term growth potential. Battery separator manufacturers with strong leadership positions in the industry are able to provide consistent, reliable and rapid production and product supply. These companies are able to layout their global markets with vision, flexibly arranging their local production facilities to implement production plans according to the actual orders from different markets. In addition, these companies could leverage their excellent technical capabilities and resources in designing theirproduction facilities independently, thereby relieving their production activities from the pressure of insufficient equipment supply. However, new entrants may lack of production build-up capability to deliver products, thus forms production capability barrier.

Equipment design, supply, and commissioning

Separator production equipment is highly customised to meet stringent technical

In China, the total shipment volume of battery separator reached approximately 23.3 billion m^2 in 2024. The top 5 companies accounted for approximately 77.5% of the total shipment volume of China battery separator market. In 2024, Our Group accounted for a market share of approximately 17.1%, and ranked second in the China battery separator market.

In order to further consolidate their competitive positions in both the global and Chinese markets, leading Chinese battery separator companies are actively establishing overseas production capacity.

Top Five Companies in Global and China Battery Separator Market by Shipment Volume, 2024

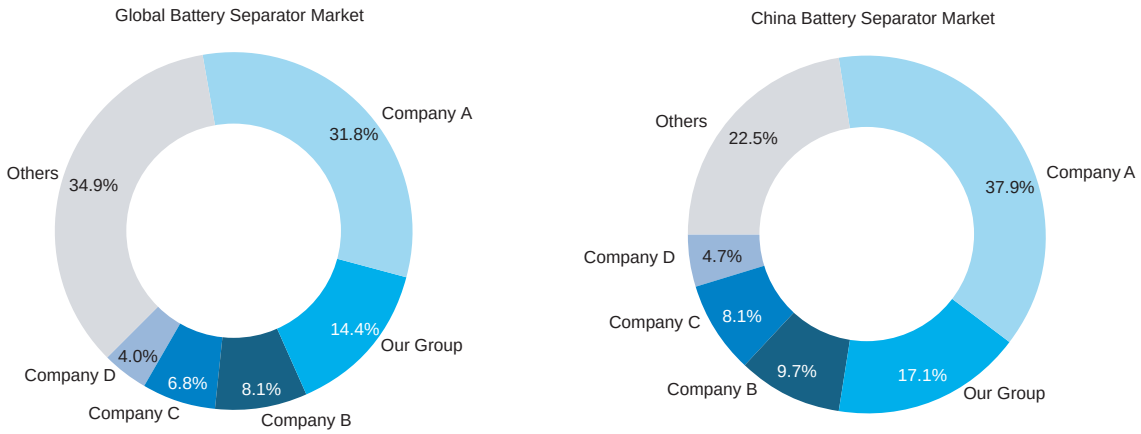

Source: Annual Reports of Listed Companies, Interviews with industry experts by Frost & Sullivan

In 2024, the total shipment volume of global dry process battery separator reached approximately 6.4 billion m^2. The top 5 companies accounted for approximately 86.9% of the total shipment volume of global dry process battery separator. In 2024, Our Group accounted for a market share of approximately 25.6%, and ranked first in the global dry process battery separator market.

In 2024, the total shipment volume of global wet process batterym8(sepa)-3.rocched

Top Five Companies in Global Dry Process and Wet Process Battery Separator Market by Shipment Volume, 2024

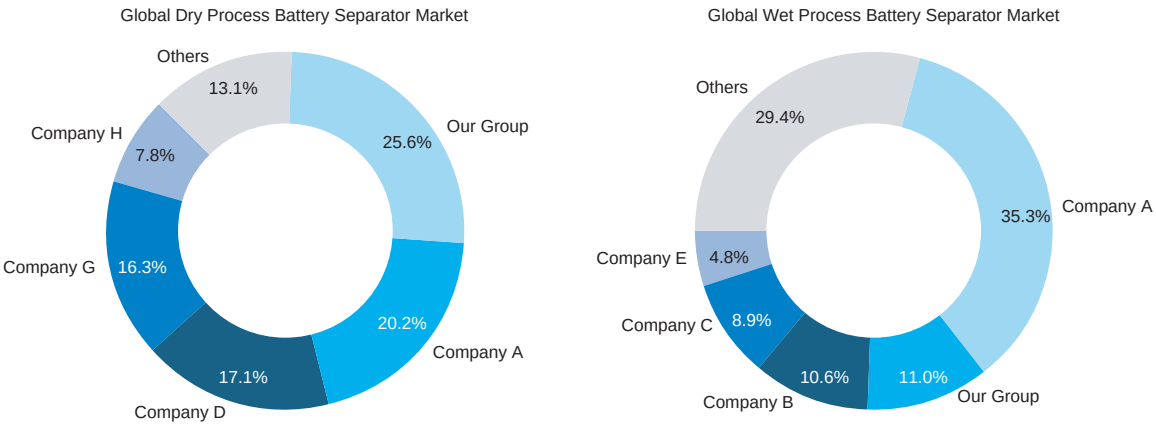

Source: Annual Reports of Listed Companies, Interviews with industry experts by Frost & Sullivan

In 2024, the total shipment volume of China dry process battery separator reached approximately 6.1 billion m^2. The top 5 companies accounted for approximately 91.8% of the total shipment volume of China dry process battery separator. In 2024, Our Group accounted for a market share of approximately 27.0%, and ranked first in China's dry process battery separator market.

In 2024, the total shipment volume of China wet process battery separator reached approximately 17.2 billion m^2. The top 5 companies accounted for approximately 87.3% of the total shipment volume of China wet process battery separator. In 2024, Our Group accounted for a market share of approximately 13.6%, and ranked second in the China wet process battery separator market.

Notes:

1. Established in 1996 and headquartered in Yunnan, China, Company A is a listed company which engaged in the production, processing and sales of new energy materials and development of new technologies and new products, including battery separator.

2. Established in 2010 and headquartered in Hebei, China, Company B is a private company which integrates research and development, production, sales and service of the wet process battery separator.

3. Established in 2001 and headquartered in Beijing, China, Company C is a listed company MTJ -2.1(B)-397.15 -1

profitability. This has strengthened the Group's ability to maintain competitiveness in a challenging market environment. At the same time, sustained volatility in raw material prices has led the Group to adopt a disciplined and forward-looking pricing strategy, balancing the need to preserve market share with the objective of supporting long-term strategic positioning. By aligning pricing with raw material cost trends and broader industry cycles, the Group has improved resilience and enhanced its capacity to pursue stable and sustainable growth.

Average Prices of Polypropylene (PP) and Polyethylene (PE) (China), 2020–2025E

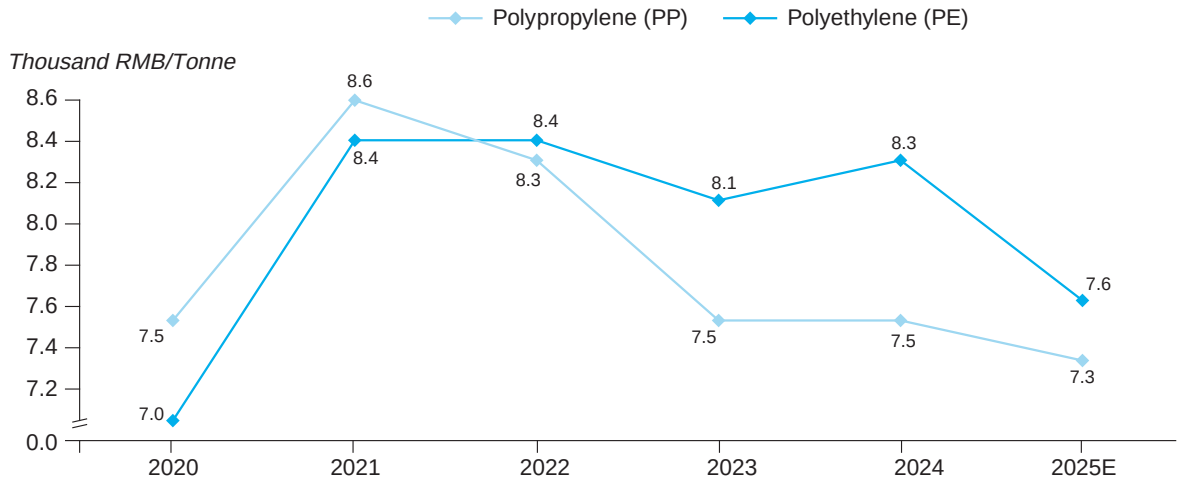

Source: Wind, Interviews with industry experts by Frost & Sullivan

OVERVIEW

We are subject to a variety of PRC laws, rules and regulations across a number of aspects of our business. This section sets out a summary of relevant laws and regulations that may have material impact on our business activities.

REGULATIONS ON PRODUCT QUALITY

In accordance with the Product Quality Law of the PRC (□□□□□□□□□□□□□□) promulgated by the Standing Committee of the National People's Congress ("SCNPC") on 22 February 1993, and most recently amended on 29 December 2018, the seller assumes responsibility for the repair, replacement, or return of the sold product under the following circumstances: (i) the product lacks the essential properties for its intended use without prior clear indication; (ii) the product does not meet the stated standards displayed on the product or its packaging; or (iii) the product does not match the quality as described in the product information or physical sample. In cases where a consumer incurs losses due to the purchased product, the seller is obligated to compensate for these losses. Under the Civil Code of the PRC (□□□□□□□□□□□) (the "Civil Code"), promulgated by the National People's Congress of the PRC on 28 May 2020, and became effective on 1 January 2021, manufacturers and commercial sellers bear liability for physical injury or property loss resulting from product defects. The affected party has the right to seek compensation from either the manufacturer or the commercial seller.

The Notice of National Standard of the People's Republic of China (No.9, 2018) (□□□□□□□□□□□□□□

According to the Law of the PRC on Prevention and Control of Environmental Pollution Caused by Solid Wastes (中華人民共和國固體廢物污染環境防治法) (the "Law of Solid Wastes"), which was last amended on 29 April 2020 by the SCNPC and came into effect on 1 September 2020, any entity or individual that generates, collects, stores, transports, utilises or disposes of solid waste shall take measures to prevent or reduce the pollution of solid waste to the environment, and shall be responsible for the environmental pollution caused in accordance with the law. Where hazardous waste exists in solid waste, it shall be managed in accordance with hazardous waste management.

According to the Law of the PRC on the Prevention and Control of Water Pollution (中華人民共和國水污染防治法), which was last amended on 27 June 2017 by the SCNPC and came into effective on 1 January 2018, the enterprises, institutions and other production and operation units directly or indirectly discharging industrial waste water and medical sewage to water bodies, and the enterprises, institutions and other production and operation units required to obtain pollutant discharging permit before discharging waste water and sewage must obtain the pollutant discharging permit. Furthermore, environmental impact assessment must be carried out in accordance with the law for newly-formed projects and reconstruction, or extensions projects that directly or indirectly discharge pollutants to water bodies and other installations on water. Water pollution prevention and control facilities should be designed, constructed and put into use at the same time as the main construction of the projects.

According to the Law of the PRC on the Prevention and Control of Atmospheric Pollution (中華人民共和國大氣污染防治法), which was last amended by the SCNPC on 26 October 2018 and took effect on the same day, enterprises, institutions and other

fines, order to correct, restriction or suspension of production for rectification, and order to cease operation, etc., on individuals or enterprises that violate the Regulations on the Administration of Pollution Discharge Permits.

Energy Conservation Review

According to the Energy Conservation Law of the PRC (中華人民共和國節約能源法), which was last amended by the SCNPC on 26 October 2018 and came into effect on the same day, the State shall implement an energy conservation assessment and audit system for fixed asset investment projects. For projects which do not meet the compulsory energy conservation standards, the developer shall not commence construction; where the construction is completed, the project shall not be put into production or use. For government investment projects which do not meet the compulsory energy conservation standards, the agency in charge of examination and approval pursuant to the law shall not grant approval for construction. Detailed measures shall be formulated by the department regulating energy conservation under the State Council jointly with other relevant State Council departments.

According to the Measures for the Energy Conservation Review of Fixed Asset Investment Projects (固定資產投資項目節能審查辦法) revised by the NDRC on 28 March 2023 and came into effect on 1 June 2023, the review opinions on energy conservation of a fixed asset investment project are an important basis for the commencement of construction, acceptance upon completion as well as operation and management of such project. For a government-invested project, the project owner shall obtain the review opinions on energy conservation issued by the energy conservation review authority prior to submitting its feasibility study report for the project. For an enterprise-invested project, the project owner shall obtain the review opinions on energy conservation issued by the energy conservation review authority prior to the commencement of construction. For a project which has not undergone the energy conservation review or fails to pass the energy conservation review, the project owner shall not commence construction, or the project shall not be put into production or use if it is already completed.

REGULATIONS ON FIRE SAFETY

According to the Fire Protection Law of the PRC (中華人民共和國消防法), which was last amended by the SCNPC on 29 April 2021 and took effect on the same day, the emergency management department under the State Council and the emergency management department under the local people's governments at or above the county

design review and acceptance should be carried out for special construction projects. With respect to the construction projects other than special construction projects, the fire protection acceptance of construction projects shall be filed with the competent authorities.

REGULATIONS ON EXPORTATION OF GOODS

Pursuant to the Foreign Trade Law of the PRC (□ □ □ □ □ □ □ □ □ □ □ □ □ □) which was promulgated by the SCNPC on 12 May 1994 and implemented on 1 July 1994, and subsequently revised on 6 April 2004, 7 November 2016, and 30 December 2022, foreign traders engaging in import and export of goods or technology shall submit documents and material related to its foreign trade activities to the relevant departments in accordance with the provisions of the foreign trade department of the State Council or other relevant State Council departments in accordance with the law.

Pursuant to the Customs Law of the PRC (□ □ □ □ □ □ □ □ □ □ □) promulgated by the SCNPC on 22 January 1987 and amended on 8 July 2000, 29 June 2013, 28 December 2013, 7 Nr 2016, 4 Nbiember 2017 and 29 April 2021, unless otherwise stipulated, the declaration of import and export goods may be made by consignees and consignors themselves, and such formalities may also be completed by their entrusted customs brokers that have registered with the Customs. The consignees and consignors for import or export of goods and the customs brokers engaged in customs declaration shall file for record with the Customs in accordance with the laws.

Pursuant to the Administrative Provisions of the Customs of the PRC on the Filing of Customs Declaration Entities (□ □ □ □ □ □ □ □ □ □ □ □ □ □ □ □ □) promulgated by the General Administration of CustoBF511h299.9417.8on1e9Tc[(NstoBF6.4(Cva)-4.5.5(Nbih2992)1.2

formalities within 30 days from execution of the property lease contract with the development authorities or real estate authorities of the municipality or county where the leased property is located. If a company fails to do as aforesaid, it may be ordered to rectify within a stipulated period, and if such company fails to rectify, a fine ranging from RMB1,000 to RMB10,000 may be imposed on each lease agreement.

According to the Interpretation of the Supreme People's Court on Several Issues concerning the Application of Law in the Trial of Cases about Disputes Over Lease Contracts on Urban Buildings (2020 version) (□□□□□□□ □□□□ □□□□□□糾□□□□□□□□□□□□□□□□□□ 2020□□□), which took effect on 1 January 2021, if the ownership of the leased premises changes during lessee's possession in accordance with

distribution, lease, exhibition, performance, projection, broadcasting, dissemination via information network, production, adaptation, translation, compilation and other rights shall be enjoyed by the copyright owners.

or have been established between employers and employees. Employers are prohibited from forcing employees to work above certain time

Contract Law; and (iii) if an employer has made supplementary contributions for social insurance, it may request the return of any overpaid amounts, and the people's courts shall support such claims.

Housing Provident Fund

In accordance with the Regulations on the Administration of Housing Provident Funds (□□□□□□□□□□□) promulgated by the State Council on 3 April 1999, and amended on 24 March 2002, and 24 March 2019, enterprises must register at the designated administrative centres and open bank accounts for depositing employees' housing provident funds. Employers and employees are also required to pay and deposit housing provident funds, with an amount no less than 5% of the monthly average salary of the employee in the preceding year in full and on time. In case of overdue payment or underpayment by employers, orders for payment within a specified period will be made by the housing fund management centre. Where employers fail to make payment within such period, enforcement by the people's court will be applied.

In case of failure to register and open accounts for depositing employees' housing provident funds, the housing fund management centre shall order employers to go through the formalities within a specified period, where employers fail to do such formalities within the prescribed time, a fine of not less than RMB10,0006(a)-30806(a)-3edd04.5(p)-3thRMB10,055(0)1.6,0.

According to the Notice of the Ministry of Finance and the State Taxation Administration on the Adjusting Value-added Tax Rates (□ □ □ □

income is not effectively connected with the establishment or place of business, to the extent such dividends are derived from sources within the PRC, unless any such non-PRC resident investors' jurisdiction of incorporation has a tax treaty with China that provides for a preferential withholding arrangement.

Non-resident investors residing in jurisdictions which have entered into treaties or adjustments for the avoidance of double taxation with the PRC might be entitled to a reduction of the Chinese EIT imposed on the dividends received from PRC companies. The PRC currently has entered into avoidance of double taxation treaties or arrangements with Hong Kong, Macau, and a number of countries and regions including Australia, Canada, France, Germany, Japan, Malaysia, the Netherlands, Singapore, the United Kingdom, the United States and etc. Non-PRC resident enterprises entitled to preferential tax rates in accordance with the relevant taxation treaties or arrangements are required to apply to the Chinese tax authorities for a refund of the EIT in excess of the agreed tax rate, and the refund application is subject to approval by the Chinese tax authorities.

REGULATIONS ON FOREIGN INVESTMENT

The Company Law of the PRC (中□□□□□□□□□□), promulgated by the SCNPC of the PRC (the "SCNPC") on 29 December 1993, last amended on 29 December 2023 and came into effect on 1 July 2024, governs the establishment, operation and management of companies in the PRC, including foreign-invested companies. Unless foreign investment laws provide otherwise, foreign invested companies shall abide by the PRC Company Law.

Pursuant to the Foreign Investment Law of the PRC (中□□□□□□□□□□□□), the Regulation for Implementing the Foreign Investment Law of the PRC (中□□□□□□□□□□□□□□□) and Measures on Reporting of Foreign Investment Information (中□□□□□□□□□□□), which became effective on 1 January 2020, the State Council establishes a foreign investment information report system. Foreign investors or foreign-funded enterprises shall submit investment information to the competent department for commerce concerned through the enterprise registration system and the enterprise credit information publicity system. The contents and scope of foreign investment information report shall be determined under the principle of necessity; it is not allowed to require the submission again of any investment information that can be obtained by interdepartmental information sharing. For foreign investment enterprises investing in China and establishing an enterprise (including multi-level investment), upon completion of registration filing and submission of annual report information to the market regulatory authorities, the relevant information shall be forwarded by the market regulatory authorities to the commerce administrative authorities, and these enterprises are not required to submit separately.

Foreign investment in the PRC is subject to the Catalogue of Industries for Encouraging Foreign Investment (2022 edition) (中鼓□□□□□□□□2022□□□□) (the "Catalogue")), amended on 26 October 2022 and effective since 1 January 2023 and the Special Administrative Measures for Foreign Investment Access (Negative List) (2024 edition) (中□□□□□□□□□□□□□□□□□□□□□□□□2024□□□□) (the "Negative List")),

amended on 6 September 2024 and effective since 1 November 2024, both of which issued by the National Development and Reform Commission (the "NDRC") and the Ministry of Commerce of the PRC (the "MOFCOM"). According to the Negative List, foreign investors shall not make investments in prohibited industries as specified in the Negative List, while foreign investments must satisfy certain conditions stipulated in the Negative List for investment in restricted industries. Industries not listed in the Negative List are generally deemed "permitted" for foreign investments.

According to the Measures for the Security Review of Foreign Investment (□□□□□□□□□□□□) promulgated by the NDRC and the MOFCOM on 19 December 2020 and became effective on 18 January 2021, any foreign investment that has or possibly has an impact on state security shall be subject to security review in accordance with the provisions hereof. A foreign investor or a party concerned in China shall take the initiative to make a declaration to the working mechanism office prior to making the investment in any important infrastructure, important transportation services and other important fields that concern state security while obtaining the actual control over the enterprises invested in.

REGULATIONS ON FOREIGN EXCHANGE

Regulations relating to Foreign Currency Exchange

The principal regulations governing foreign currency exchange in China are the Foreign Exchange Administration Regulations of the PRC (□□□□□□□□□□□□), most recently amended in August 2008. Under the PRC foreign exchange regulations, payments of current account items, such as profit distributions, interest payments and trade and service-related foreign exchange transactions, can be made in foreign currencies without prior approval from the State Administration of Foreign Exchange, or SAFE, by complying with certain procedural requirements. By contrast, approval from or registration

foreign-invested company is regulated such that Renminbi capital may not be used for business beyond its business scope or to provide loans to persons other than affiliates unless otherwise permitted under its business scope.

In October 2019, SAFE issued the Circular of Further Facilitating Cross-border Trade and Investment (

Securities Laws and Regulations

The Securities Law of the PRC ( ), which was promulgated by the SCNPC on 29 December 1998, and was latest amended on 28 December 2019 and took effect on 1 March 2020, comprehensively regulating activities in the PRC securities market including issuance and trading of securities, takeovers by listed companies, securities exchanges, securities companies and the duties and responsibilities of securities regulatory authorities, etc. The Securities Law further regulates that a domestic enterprise issuing securities overseas directly or indirectly or [REDACTED] their securities overseas shall comply with the relevant provisions of the State Council and for [REDACTED] and [REDACTED] of shares of domestic companies using foreign currencies, detailed measures shall be stipulated by the State Council separately. The CSRC is the securities regulatory body set up by the State Council to supervise and administer the securities market according to law, maintain order in the market, and ensure the market operates in a lawful manner. Currently, the [REDACTED] and [REDACTED] of H shares are principally governed by the regulations and rules promulgated by the State Council and the CSRC.

Overseas [REDACTED]

On 17 February 2023, the CSRC released several regulations regarding the management of filings for overseas [REDACTED] and [REDACTED] by domestic companies, including the Overseas Listing Trial Measures together with five supporting guidelines (together with the Overseas Listing Trial Measures, collectively referred to as the "Overseas Listing Regulations"). Under Overseas Listing Regulations, PRC domestic companies that seek to [REDACTED] and [REDACTED] securities in overseas markets, either in direct or indirect means, are required to file the required documents with the CSRC within three working days after its application for overseas [REDACTED] is submitted.

The Overseas Listing Regulations provides that no overseas [REDACTED] and [REDACTED] shall be made under any of the following circumstances: (i) such securities [REDACTED] and [REDACTED] is explicitly prohibited by provisions in laws,

[REDACTED] and [REDACTED] securities in an overseas market, the issuer shall submit a report to the CSRC within three working days after the occurrence and public disclosure of (i) a change of control thereof, (ii) investigations of or sanctions imposed on the issuer by overseas securities regulators or relevant competent authorities, (iii) changes of [REDACTED] status or transfers of [REDACTED] segment, and (iv) a voluntary or mandatory delisting. Overseas [REDACTED] and [REDACTED] by domestic companies shall be made in strict compliance with relevant laws, administrative regulations and rules concerning national security in spheres of foreign investment, cybersecurity, data security and etc., and duly fulfil their obligations to protect national security.

On 24 February 2023, the CSRC and three other relevant government authorities jointly promulgated the Provisions on Strengthening the Confidentiality and Archives Administration Related to the Overseas Securities Offering and Listing by Domestic Enterprises (□□□□□□ □□□□□□□□□□ □□□□□□□ □□□□□) (the "Provision on Confidentiality"). Pursuant to the Provision on Confidentiality, where a domestic enterprise provides or publicly discloses any document or material that involving state secrets and working secrets of state agencies to the relevant securities companies, securities service institutions, overseas regulatory authorities and other entities and individuals, it shall report to the competent department with the examination and approval authority for approval in accordance with the law, and submit to the secrecy administration department of the same level for filing. The working papers formed within the territory of the PRC by the securities companies and securities service agencies that provide corresponding services for the overseas [REDACTED] and [REDACTED] of domestic enterprises shall be kept within the territory of the PRC, and cross-border transfer shall go through the examination and approval formalities in accordance with the relevant provisions of the State.

OVERVIEW

Leveraging with his educational background in power engineering, our Company, then

Year	Event
2013	. We expanded our business of lithium-ion battery separator into South Korea, the first of our overseas markets.
2015	. The third generation of dry process separator production line commenced operation with improved performance stability.
2016	. We were listed on ChiNext of Shenzhen Stock Exchange under the stock code 300568.
	. Our production line for nanocomposite separators was established and commenced operation in Shenzhen, China.
	. We established Hefei Senior.
2017	. We established Changzhou Senior.
2018	. We established Jiangsu Senior.
2021	. We expanded our business of lithium-ion battery separator into Europe and established Europe Senior.
	. We established Nantong Senior.
2023	. We established Foshan Senior.
	. We were listed on the SIX Swiss Exchange under the stock symbol SENIOR.
2024	. We started the construction of our US manufacturing base in the U.S. and Malaysia manufacturing base in North Carolina, the

PRINCIPAL SUBSIDIARIES AND OPERATING ENTITIES

MAJOR CHANGES OF OUR COMPANY

Incorporation of our Company and Conversion into a Joint Stock Company

Listing on ChiNext of the Shenzhen Stock Exchange

In December 2016, our Company was listed on ChiNext of the Shenzhen Stock Exchange under the stock code 300568. In connection with the listing, we completed an initial public offering of our A Shares (the "A Share Offering"), pursuant to which our total share capital increased from RMB90,000,000 to RMB120,000,000. The shareholding structure of our Company immediately after A Share Offering was as follows:

Name of Shareholders	Number of A Shares Held	Percentage of Shareholding
Prof. Chen	31,442,825	26.20%
Shenzhen Oriental Fortune Venture Capital (Limited Partnership) (□)	6,796,850	5.66%
Chen Liang (□ □)	6,288,525	5.24%
Lhasa Changyuan Yingjia Investment Co., Ltd. (□ □ □ □ □ □ □ □ □ □ □ □ □ □ □ □ □ □)	5,685,725	4.74%
Shenzhen Xiaoyang Science & Technology Investment Co., Ltd. (□ □ □ □ □ □ □ □ □ □ □ □ □ □ □ □ □ □)	4,854,925	4.05%
Shenzhen Chuangdongfang Growth Investment Enterprise (Limited Partnership) (□)	3,883,925	3.24%
Sichuan Zhongcheng Management Consulting Co., Ltd. (□ □ □ □ □ □ □ □ □ □ □ □ □ □ □ □ □ □)	3,857,175	3.21%
Shenzhen Suyuan Investment Enterprise (Limited Partnership) (□)	3,634,650	3.03%
Shenzhen Suyuan Holdings Group Co., Ltd (□ □ □ □ □ □ □ □ □ □ □ □ □ □ □ □ □ □)	3,500,000	2.92%
Shenzhen Huashang Dingsheng Equity Investment Partnership (Limited Partnership) (□ □ □ □ 鼎 □)	2,500,000	2.08%
Other A Shareholders[(1)]	47,555,400	39.63%
Total	120,000,000	100%

Note:

(1) Each of other A Shareholders held no-1.2722191..3385-1oA44.8(tal)-T085-1oA

Listing on SIX Swiss Exchange

In December 2023, our Company was listed on SIX Swiss Exchange under the stock symbol SENIOR. In connection with the listing, we completed a public offering of 12,684,800 GDRs, representing interests in a total of 63,424,000 A Shares (the "GDR Offering"). Upon the completion of the GDR Offering, our total share capital increased from RMB1,281,682,969 to RMB1,345,106,969.

Share Cancellations

Between 9 November 2023 and 21 May 2025, the Board and the Shareholders (as the case may be) approved the cancellation of 3,271,967 Restricted Shares that had been granted under the 2022 Share Incentive Plan but had not yet been vested. After the completion of the share cancellations and a series of capital changes from 2024 up to the Latest Practicable Date, our Company had a total share capital of RMB1,345,710,639 divided into 1,345,710,639 A Shares.

MAJOR ACQUISITIONS AND DISPOSALS

During the Track Record Period and up to the Latest Practicable Date, we had not conducted any acquisitions, disposals or mergers that we consider material to us and would require disclosure under Rule 4.05A of the Listing Rules.

OUR LISTING ON THE SHENZHEN STOCK EXCHANGE AND SIX SWISS EXCHANGE AND REASONS FOR THE [REDACTED] ON THE STOCK EXCHANGE

Our Company has been listed on ChiNext of the Shenzhen Stock Exchange and the SIX Swiss Exchange since 2016 and 2023, respectively. We seek to be [REDACTED] on the Hong Kong Stock Exchange in order to further advance our global strategic layout, establish an international capital operation platform, and enhance our comprehensive competitiveness. please see "Business — Our Growth Strategies" and "Future Plans and Use of [REDACTED]" for more details.

Our Directors confirmed that during the Track Record Period and up to the Latest Practicable Date, we had complied with the rules of the Shenzhen Stock Exchange and SIX Swiss Exchange and other applicable securities laws and regulations of the PRC and Switzerland in any material respects, and, to the best knowledge of our Directors having made all reasonable enquiries, there was no material matter that should be brought to the investors' attention in relation to our compliance record on the Shenzhen Stock Exchange and SIX Swiss Exchange. Based on the indepe

confirmation from the SIX Swiss Exchange, since its listing on the SIX Swiss Exchange and up to the Latest Practicable Date, the Company has not been subject to any sanctions by SIX Exchange Regulation AG for violations of Swiss stock exchange regulations.

PUBLIC FLOAT AND FREE FLOAT

Satisfaction of the Public Float Requirement

Rule 19A.13A of the Listing Rules provides that, where a new applicant is a PRC issuer with other listed shares at the time of listing, this will normally mean that the portion of H shares for which listing is sought that are held by the public, at the time of listing, must (a) represent at least 10% of the issuer's total number of issued shares in the class to which H shares belong (excluding treasury shares); or (b) have an expected market value of not less than HK$3,000,000,000.

Our A Shares are listed on the Shenzhen Stock Exchange. The total number of the H Shares to be issued pursuant to the [REDACTED] represents [REDACTED]% of the total issued share capital of our Company (assuming that the [REDACTED] are not exercised), which satisfy the requirements under Rule 19A.13A(2)(a) of the Listing Rules.

Satisfaction of the Free Float Requirement

Rule 19A.13C of the Listing Rules provides that, where a new applicant is a PRC issuer with other listed shares at the time of listing, this will normally mean that the portion of H shares for which listing is sought that are held by the public and not subject to any disposal restrictions whether under contract, the Listing Rules, applicable laws or otherwise, at the time of listing, must: (a) represent at least 5% of the total number of issued shares in the class to which H shares belong at the time of listing (excluding treasury shares), with an expected market value at the time of listing of not less than HK$50,000,000; or (b) have an expected market value at the time of listing of not less than HK$600,000,000.

Immediately following the completion of the [REDACTED] (assuming the [REDACTED] is not exercised), the total market value of H Shares required to be held in public hands and not subject to any disposal restrictions is expected to be no less than HK$[REDACTED], calculated based on an [REDACTED] of HK$[REDACTED] per H Share, being the low-end of the indicative [REDACTED], which is higher than the prescribed expected market value of H Shares required to be held in public hands of not less than HK$600,000,000. Therefore, the Company is expected to satisfy the free float requirement under Rule 19A.13C of the Listing Rules.

CORPORATE STRUCTURE

Corporate structure immediately before the [REDACTED]

The following simplified diagram illustrates the corporate and shareholding structure of our Group, immediately prior to the completion of the [REDACTED].

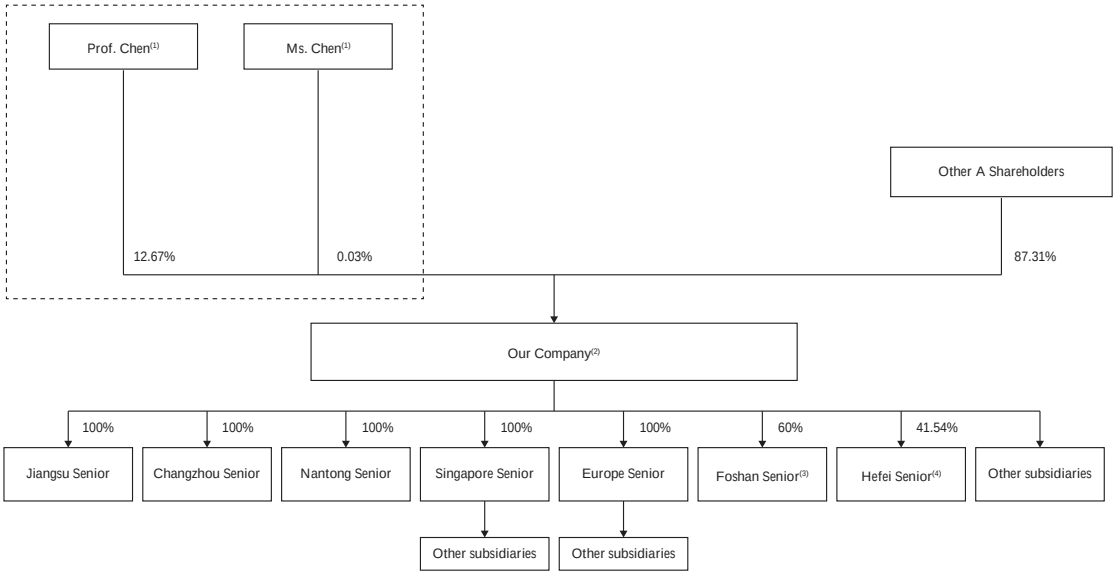

Notes:

(1) Prof. Chen and Ms. Chen form the Single Largest Shareholders of our Company. Please see "Relationship with Our Single Largest Shareholders" for details.

(2) As at the Latest Practicable Date, we had 22 subsidiaries, including our Principal Subsidiaries and other subsidiaries incorporated in various jurisdictions.

(3) As at the Latest Practicable Date, the remaining 40% interests in Foshan Senior were held by Foshan Lanhai Huizhi Investment Management Co., Ltd. (□□□[illegible]□□□□□□□□□□□□), which is in turn held by Foshan Nanhai Industrial Development Investment Management Co., Ltd. (□□□□□□□□□□□□□□□□□□), a state-owned enterprise and an independent third party of the Company, as to 80%.

(4) As at the Latest Practicable Date, the remaining interests in Hefei Senior were held by Hefei Construction, a state-owned enterprise, and Hefei Guoxuan as to 30.77% and 27.69%, respectively. Based on the articles of association and the shareholders agreement of Hefei Senior, its board of directors shall consist of five members, among which our Company shall have the right to appoint three; further, Hefei Construction shall be entitled to an annual return of 1.29% of its investment in Hefei Senior, and any remaining distributable profits of Hefei Senior shall be allocated to our Company as to 60% and Hefei Guoxuan as to 40%, respectively. Hefei Guoxuan is a wholly owned subsidiary of Gotion High-tech.

Corporate structure immediately following the [REDACTED]

The following simplified diagram illustrates the corporate and shareholding structure of our Group immediately following the completion of the [REDACTED], assuming that the [REDACTED] is not exercised.

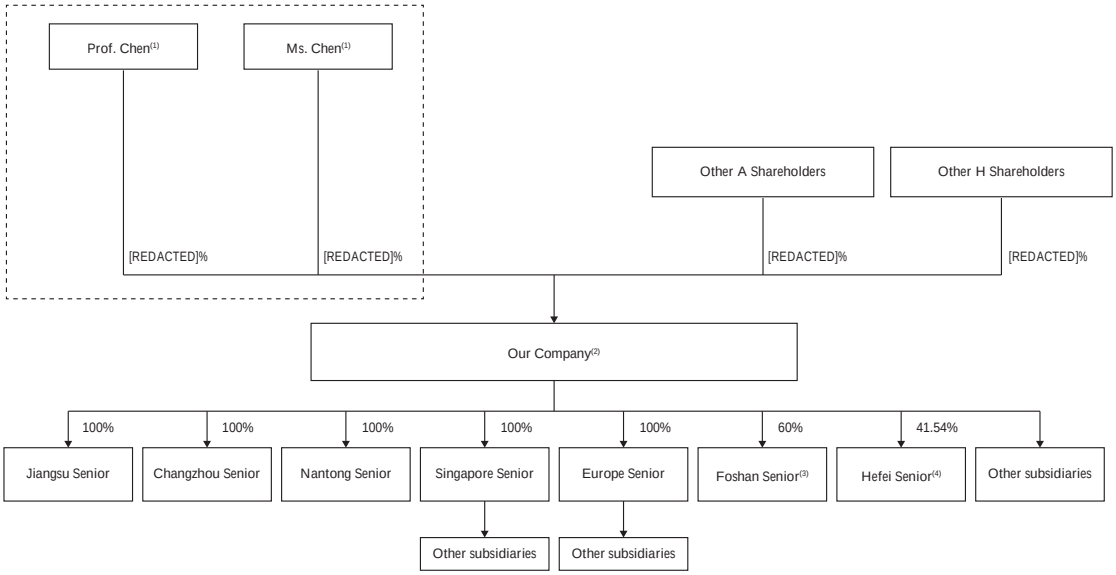

Notes:

(1)–(4): Please see the respective notes under "— Corporate Structure — Corporate structure immediately before the [REDACTED]" of this section.

OVERVIEW

We are a competitive lithium-ion battery separator manufacturer that endeavours to offer high-quality products to customers. We were founded in 2003 and accumulated more than 20 years of industry experience in research and development, production and sales of lithium-ion battery separators. According to Frost & Sullivan, we are the first Chinese

other functional membranes that spans various scenarios. Through our advanced technologies in functional membranes, we aim to provide reliable material solutions for relevant high-value industries, including green energy and semiconductors.

Leveraging our technological advantages, diverse portfolio of leading products, high-quality and efficient production capacity, forward-l110uln8 Tc [(hlob)-4.1(rl5.3(ity,sa)-4.tra)-.3(va

low-altitude economy, aerospace and smart wearables have presented increasingly sophisticated and specialised demands, driving further innovation in lithium-ion battery technology and its critical components, such as separators. As a result, the market for lithium-ion battery separators, essential materials within these batteries, is closely tied to advances in new energy applications. According to Frost & Sullivan, the global lithium-ion battery market is projected to reach a shipment volume of 4,680.4 GWh by 2029. Demand for batteries in the EV sector is expected to rise from 1,037.8 GWh in 2024 to 3,369.9 GWh in 2029; in energy storage, from 355.2 GWh in 2024 to 1,123.3 GWh in 2029; and in consumer electronics, from 91.4 GWh in 2024 to 128.0 GWh in 2029. Correspondingly, the global lithium-ion battery separator market, measured by shipment volume, will expand from 27.7 billion square metres in 2024 to 84.1 billion square metres in 2029, reflecting both sustained demand growth and accelerating innovation across traditional and emerging sectors.

According to Frost and Sullivan, there exists a demand-supply gap in overseas markets due to limited local production capacity for separators. As global adoption of electric vehicles (EVs) accelerates, we believe this supply shortfall continues to drive strong international demand. In 2024, Chinese companies supplied over 80% of the global separator market, according to Frost & Sullivan. However, as geopolitical risks and the threat of supply chain disruptions increase, overseas customers have actively sought support from local separator suppliers. We believe our strategic global presence and significant overseas production capacity position us well to serve the overseas markets. By drawing on our extensive experience with leading international customers, we are able to bridge the demand-supply gap, secure long-term relationships with key customers and further strengthen our role in the global value chain, thereby enhancing our global competitiveness.

According to Frost and Sullivan, suppliers of lithium-ion battery separators currently face a range of complex challenges. The industry is experiencing increasingly stringent performance requirements, driven by evolving end-user demands, rapid technological advances, tougher government regulations and a heightened focus on battery safety, durability and lifespan. To meet these demands, companies must closely monitor developments downstream and invest in strengthening independent research and development (R&D) capabilities. For example, the forthcoming Safety Requirements and Test Methods for Power Batteries for Electric Vehicles ( ), a mandatory national standard issued by the MIIT that will come into effect on 1 July 2026, will further raise the bar for thermal diffusion safety requirements for EV batteries. On the other hand, technological advancements such as the development of sodium-ion and solid-state batteries present future opportunities and challenges alike, highlighting the critical need for forward-looking R&D strategies within the separator industry.

According to Frost and Sullivan, ongoing technological progress, increased capital investment and rapid capacity expansion have reduced costs but heightened price competition for standard products. To ensure competitiveness and profitability, separator manufacturers must focus on developing mid- to high-end products that deliver greater performance and better value, including ultra-thin functional coatings and innovative

Products Series	Main Specifications	Applications	Advantages
Forward-looking layout			
Semi-solid-state electrolyte separator	3–20		

Our Innovation System

To drive ongoing innovation and development, we have created a robust three-pronged innovation ecosystem. This ecosystem consists of a strong internal research and development mechanism, a team of highly experienced technical specialists with cross-disciplinary expertise and a strategic platform that fosters collaboration between industry, academia and research institutions. Together, these elements enable us to effectively mitigate the impact of overcapacity and intense market competition, achieve breakthroughs in key performance indicators for lithium-ion battery separators, continuously upgrade and refine our proprietary production equipment, and conduct forward-looking research and development on new functional membranes.

- Strong internal R&D mechanism: Our in-house research and development platform for battery separators has enabled us to build strong capabilities in raw material formulation, rapid formula adjustment and microporosity formation technology. By implementing equity incentive programmes and establishing a comprehensive engineering technology development framework, we have built strong expertise in both process and equipment technologies for separator manufacturing. This solid foundation has enabled us to advance the development of next-generation battery separators and new functional membranes.

- Industry-leading R&D team consisting of cross-disciplinary technical talents: As at 30 September 2025, we have established a multidisciplinary R&D team of 738 members specialised in fields of material science, polymer chemistry, mechanical automation and electrochemistry. Our R&D personnel make up over 14.9% of our workforce. Moreover, we have set up R&D centres in Southern China (Shenzhen), Eastern China (Nantong), Japan (Osaka) and Europe (Sweden), integrating global R&D talent by combining regional industry and academic strengths.

-

- Many of our separator research projects have been recognised by prestigious national programmes and have received numerous awards for innovation and quality, such as the “PRC Torch Programme” and “863 Plan”. These accolades highlight our leadership in the industry and our commitment to excellence.

- We are the leading organisation and deputy leader of the editorial committee for drafting national standards related to lithi battery separators. We have led or served as the main drafter of two national standards and 21 industry standards in the lithi3Acion battery separator sector.

- As at 30 September 2025, we applied for a total of 985 patents, including 287 overseas patents; we obtained 478 valid patents, including 201 authorised invention patents (of which 90 are overseas invention patents) and 277 authorised utility model patents.

Our Sustainability Initiatives

We have established an efficient ESG system that integrates sustainable development into our corporate strategy and operations. Our environmental initiatives include implementing a low-carbon development strategy, launching clean energy projects and achieving significant carbon reductions. Socially, we prioritise occupational health and safety, building a safe working environment with strict quality control. Our efforts have led to the creation of the first net-zero industrial hub in the separator industry and significant use of renewable energy, including

arepetitive
industr.

We are the first lithium-ion battery separator manufacturer to achieve mass export of lithium-ion battery separators, according to Frost & Sullivan, which is defined as the first manufacturer in industry to have the continuous and stable supply of substantial volumes of lithium-ion battery separator products that consistently meet the production requirements of major overseas customers. With a steady growth in our international customer base, we keep expanding our overseas production capacities through construction of manufacturing bases in Sweden, Malaysia and the United States. As a result, our overseas production capacity ranked first in terms of planned annual production compacity in 2024, according to Frost and Sullivan. Leveraging our first-mover advantage in the overseas market, we have established an international sales network and continue to improve our service capabilities for overseas customers. Our sales and service network

- Wet process separator. We have focused on advancing wet process separator technologies, achieving significant breakthroughs in the production of ultra-thin and wide-format battery separators as well as scenario-based customisation, which enhance battery energy density without compromising safety. Our innovative wide-format production line design has significantly increased production efficiency and delivered greater economies of scale.

- Coated separator. We are one of the earliest lithium-ion battery separator

key manufacturing processes and production equipment for separator production. This approach has laid a solid technological foundation for the research and development of next-generation battery separators and new functional membranes.

Building on our independent research and development, we have established an industry-leading platform and multi-dimensional system for separator innovation, fully leveraging resources from various partners to continuously improve our technological capabilities. We have founded several in-house R&D platforms, such as the National-Local Joint Engineering Research Centre for High-End Lithium-ion Battery Separator Preparation and Testing Technology, with a focus on separator materials, process technology, production equipment and end-use applications.

As at 30 September 2025, we have established a multidisciplinary R&D team of 738 members specialised in fields of materials science, polymer chemistry, mechanical automation and electrochemistry. Our R&D personnel make up over 14.9% of our total employees. Furthermore, we have set up R&D centres in Southern China (Shenzhen), Eastern China (Nantong), Japan (Osaka) and Europe (Sweden), integrating global R&D talent by combining regional industry and academic strengths. This R&D network integrates global R&D resources such as material innovation in Japan, equipment design in Europe and industrialization efficiency in China, enabling us to efficiently respond to differentiated market demands.

We carry out industry-academia-research cooperation with Sichuan University, jointly establish a "Postdoctoral Innovation Practice Base" with South China University of Technology, and conduct equipment, process, technology development and talent nurturing work in respect of high-performance lithium-ion battery separators and various functional membranes with Tsinghua University, Huazhong University of Science and Technology and other universities and research institutes.

We are one of the few enterprises in the industry with independent equipment research and design capabilities

The separator industry is capital-, technology- and asset-intensive, with complex manufacturing processes that demand highly specialised equipment. Unlike general membrane processing, separator equipment must be customised to our specific process requirements. We are one of the few companies in the lithium-ion battery separator industry with independent research, design and development capabilities for key manufacturing equipment. Through years of independent R&D, we have mastered the design and engineering of core separator production machinery, including raw material handling, extrusion, casting, stretching, extraction, recovery, slitting and coating systems. All key equipment is either developed in-house or tailor-made to our specifications, ensuring optimal integration with our processes and meeting exacting quality standards. We regularly upgrade our manufacturing lines to enhance quality and efficiency in line with market needs. For details, see "—Equipment and Machinery."

We believe our self-developed production lines offer a significant competitive advantage in cost efficiency. In August 2023, we launched the world's first fifth-generation super wet process production line, featuring an equipment width of over eight metres and an annual production capacity of 250 million square metres. This represents more than double the single-line capacity of our previous fourth-generation wet process line, establishing a new industry benchmark for production efficiency and creating a substantial competitive barrier. The latest generation of manufacturing equipment incorporates major advancements in automation and intelligence, introducing the industry's first smart manufacturing system 2.0 platform. This system integrates the Warehouse Management System (WMS), Warehouse Control System (WCS) and Manufacturing Execution System (MES) to enable real-time monitoring, process inspection and assignment of unique identifiers to each product, ensuring full traceability and consistently high product quality. According to Frost & Sullivan, our fifth-generation super wet process line also achieves ultra-low emissions and ultra-high recovery rates, setting new standards for quality, efficiency, intelligence and low-carbon operation.

Meanwhile, we have upgraded our dry process separator production lines to the sixth generation, increasing efficiency by 40% compared to the previous generation. We have successfully achieved a higher level of domestic manufacturing capability for dry process separator production equipment, thereby advancing localisation within the separator industry. During the Track Record Period, continuous process optimisation and technological improvements have significantly enhanced the capacity of both our dry and wet process production lines, resulting in lower unit production costs. Leveraging our technology, customer relationships, equipment and cost management, we achieved industry-leading gross profit margins during the Track Record Period. We believe that independent equipment R&D capabilities differentiate us from our peers and lay the foundation for our long-term growth.

Our global production and R&D network lay the foundation for our services to overseas customers

As at the Latest Practicable Date, our manufacturing bases that have commenced mass production are all located in China, namely Shenzhen, Hefei, Changzhou, Nantong, Jiangsu and Foshan manufacturing bases. We believe we have seized the market opportunities brought by the rapid development of the lithium-ion battery separator industry and actively expanded our production capacities and developed middle- and high-end products, which allowed us to enhance our global presence. Each of our manufacturing bases that have commenced mass production achieved a utilisation rate of over 80% in 2024. We plan to further expand our production capacity through our new manufacturing base in Sweden, Malaysia and the U.S. which are under construction and will gradually become operational to meet customers' orders in the overseas markets.

Through streamlined production, management and quality control systems, we are able to control costs and ensure stable supply and product quality. We have implemented a "make-to-order" production approach and developed the ISO production process management control system to process customer orders efficiently. We believe in our ability to accurately identify customer needs and market opportunities, as our production planning, raw material procurement, manufacturing, storage, quality control, delivery and related processes enable us to meet the diverse requirements of our clients. We regard product quality control as a key part of production management, in particular safety performances as it is fundamental to our brand recognition. The quality of our products is well regarded in the overseas markets. We have been recognised as an "Excellent Partner" and "Excellent Quality Partner" by LG Energy Solution, and as "Best Strategic Partner" by Sunwoda. In 2023, we also received the "Excellent Quality Award" from EVE Energy and the "Excellent Supply Award" from Gotion High-tech.

Our global R&D centres and manufacturing bases operate in close synergy to drive innovation and maintain competitiveness across our product lines. For example, the Membrane Technology Research Institute in Shenzhen is responsible for the implementation of annual plans for product a

The graph below demonstrates our global presence, showcasing the network of our

Our customers include over 100 lithium-ion battery customers. Domestically, our primary customers include well-known battery manufacturers such as CATL, BYD, CALB, Gotion High-tech, Sunwoda and EVE Energy; in the overseas market, our products are supplied to top-tier manufacturers such as LG Energy Solution, Samsung SDI, AESC, Murata, SK On and SAFT.

We are committed to continuously deepening our global development strategy and vigorously expanding our overseas customer base. Our lithium-ion battery separator products generally enjoy higher profitability in overseas markets than in the domestic market. As the first lithium-ion battery separator manufacturers in China to achieve mass export to the overseas markets, we believe we enjoy a first-mover advantage internationally. Benefiting from this, and as our overseas manufacturing bases commence operations, our

tivsmhais(m)-490.3(t03(o)-540.3pu)-3.7(omotes)-3pmenst

due(,)-960.3Puof.,enen, isiigsenelit hium-io nttery
aator iodsitrai
(n)3960.3holdesundshv(bnstar)43.9(y)-95349(expar)43.9(i)4.9(ncge)-991.5andsneatioy
e lithl um-iont
sid(e)-5.3(n)1.1(t)30-5.8onSeze(n)30-4.1PnIanu(s)-5.5(tyn)30-449(A)182(s)-5
Cucbil e Sh(e)-5.3(zhv)-4.1(e)4.1(g)-4903(Qo)1.8upaty
e(eral)-527.4(C3-.4(hmbr92.9ter)-266.2oft)-26654
resce
cross-disciplnabry sovd(e)-3(s)-350.4(wi)-5.8(th)-1

OUR GROWTH STRATEGIES

Continue to invest in the R&D of key technologies for lithium-ion battery separator products, production equipment, raw material, solid-state battery membranes and other functional membranes

We will further invest in product R&D and technological innovation to reinforce our leading position in lithium-ion battery separator technology. At the same time, we will promote advances in solid-state battery membranes and other functional membranes, progressing towards a world-leading enterprise in the research, development and manufacturing of polymer functional membranes.

In the lithium-ion battery separator sector, we focus on meeting the core requirements of next-generation batteries with high energy density, enhanced safety, rapid charging and cost efficiency. Our primary strategy centres on the use of thin base membranes, diverse specialised coatings, advanced equipment and a robust local supply chain. This integrated approach is designed to create comprehensive technical barriers spanning products, equipment and raw materials. Specifically:

- Product innovation: We are dedicated to enhancing both our dry process and wet process separators, with a particular focus on developing ultra-high-strength base membranes and broadening our coating portfolio. This includes high heat resistance coatings, aqueous high adhesion coatings, fluorine-free coatings and high-performance specialty coatings. These advancements will expand the application scenarios for our lithium-ion battery separator products, offering global customers solutions that improve energy density, lifecycle and overall safety.

- Equipment advancement: We will continue upgrading our production lines to increase their width, speed, intelligence and environmental friendliness. By integrating artificial intelligence technology, we aim to further promote intelligent manufacturing and establish strong technical barriers. Leveraging our world-leading capabilities in smart separator manufacturing, we will further strengthen our advantages in product quality and production efficiency.

- Raw material development: We will promote collaboration among industry, academia and research institutions to advance the localised production of high-quality raw materials, enriching our material variety and reducing costs. At our overseas manufacturing bases, we will work closely with customers to accelerate the adoption of local raw materials and develop local supply capacities, thereby lowering transport costs and enhancing supply chain resilience.

- Solid-state battery innovation: We are committed to developing core technologies for semi-solid-state electrolyte separators and solid-state battery electrolyte membranes. By collaborating across the supply chain, we aim to jointly drive the development of cutting-edge technologies and products. With our advancing R&D ability and existing manufacturing equipment we are prepared for mass production of our oxide and polymer solid electrolyte membranes and are actively advancing related product industrialisation.

For other functional membranes, our strategy of "in-depth technology + diverse application" builds on our expertise in the lithium-ion battery separator sector to expand into sectors such as water treatment membranes and heat exchange membranes. We have completed the technical feasibility demonstration and prototype development in several new areas. Moving forward, we will increase investment to accelerate breakthroughs in core technologies, such as membrane structure design and surface modification, and drive the industrialisation and broad application of these products. Our goal is to build a global ecosystem for functional membranes, covering a wide range of sectors including new energy, energy saving, environmental protection and medical and healthcare industries.

Strengthen our relationships with existing customers, accelerate overseas market expansion and actively pursue new customers worldwide

We will continue to look for opportunities for strategic collaborations across the global lithium-ion battery value chain, which we believe will bring us the opportunities for deepening cooperation in technological innovation, production capacity synergy, and market development. These partnerships will enable us to provide complementary technical support, jointly expand market opportunities and share risks. For details, see "Future Plans and Use of [REDACTED] — Use of [REDACTED]."

- Technological innovation. We will work closely with our world-leading lithium-ion battery customers on R&D initiatives, align with their requirements and participate in their product innovation processes. This approach not only meets customer needs but also drives continuous upgrades and technical advancements in our products.

- Production capacity synergy. We plan to establish manufacturing bases overseas, achieving localised manufacturing both domestically and overseas. This will better fulfil downstream customers' requirements for a global production footprint.

- Market development. We aim to expand downstream applications by exporting our technical standards and leveraging our global production capacity, working hand in hand with customers to open new market opportunities.

We remain committed to an international development strategy. Seizing opportunities from the rapidly growing NEV industry, w

products. The successful execution of these projects will significantly boost our production capacity worldwide, establishing us as a specialised leader in lithium-ion battery separator research, development, and production, with comprehensive supply capabilities and advanced technologies.

Our “international R&D strategy” places the Shenzhen headquarters at the centre of our global innovation efforts while reinforcing overseas R&D centres to form a network with localised strengths. We have set up R&D centres in Southern China (Shenzhen), Eastern China (Nantong), Osaka (Japan) and Sweden to create a globally interconnected R&D platform, enhancing resource integration and collaborative innovation worldwide.

To build core competitiveness, we are deepening our global talent development strategy by recruiting and cultivating R&D as well as sales professionals. In R&D, we target

relationships, including with companies already operating in or adjacent to the semiconductor industry, open up valuable pathways to potential customers in the new sector. Finally, our rigorous quality control systems and experience in meeting international standards align well with the requirements of the semiconductor industry, allowing for a smooth expansion into this business.

In the semiconductor materials sector, we are developing high-purity ceramic materials such as aluminium oxide, silicon dioxide and boehmite, which have applications in thermoelectric semiconductors, ceramic boards and quartz components. With the growing global demand for intelligent and automated equipment, these semiconductor materials are

The flowchart below illustrates the critical role battery separator plays in the entire lithium-ion battery value chain:

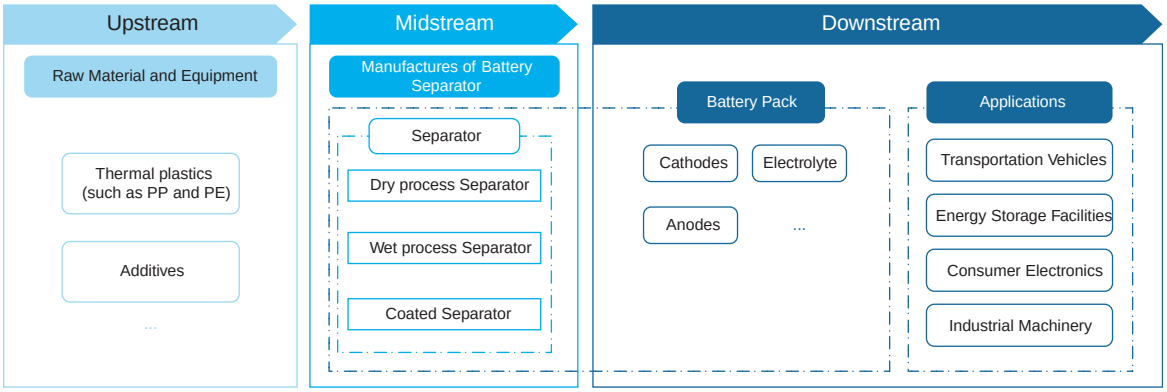

- Upstream: Major upstream suppliers in the battery separator industry encompass raw material suppliers and equipment manufacturers. Raw material suppliers provide materials such as thermal plastics, additives, packaging and auxiliary production materials, while the equipment suppliers provide machineries and tools.

- Midstream: Battery separator manufacturers at the midstream offer dry, wet and coated process separators that are suitable for different applications. The leading battery separator manufacturers that have in-house design capability generally design key production equipment for both dry and wet process separators that is highly compatible with their proprietary production techniques, which will enable them to produce high-quality separators with high level of precision and production efficiency.

- Downstream: The battery separators are applicable to lithium-ion batteries for a wide range of application scenarios, including transportation vehicles, industrial machinery, energy storage facilities and consumer electronics, etc.

We pride ourselves on being a reliable partner to other players in the lithium-ion battery value chain. Given the essential role of battery separators in the lithium-ion battery, the downstream lithium-ion battery manufacturers place great emphasis on the selection of suppliers of separators. As the first Chinese enterprise engaged in the research and manufacturing of lithium-ion battery separators according to Frost and Sullivan, and with more than 20 years of industry experience, we believe we have become a world-leading

OUR PRODUCTS

We are primarily engaged in the R&D, manufacturing and sales of lithium-ion battery separator which is an indispensable and core component of lithium-ion batteries. During the Track Record Period, we offer our customers a comprehensive product portfolio of lithium-ion batteries separators that are designed and manufactured in-house, which primarily include dry process separators, wet process separators and coated separators.

With more than 20 years of specialisation in the lithium-ion battery industry, our team

shrinkage of the separator would cause the anode and cathode in the battery to come into

The chart below demonstrates the specific applications of our lithium-ion battery separators.

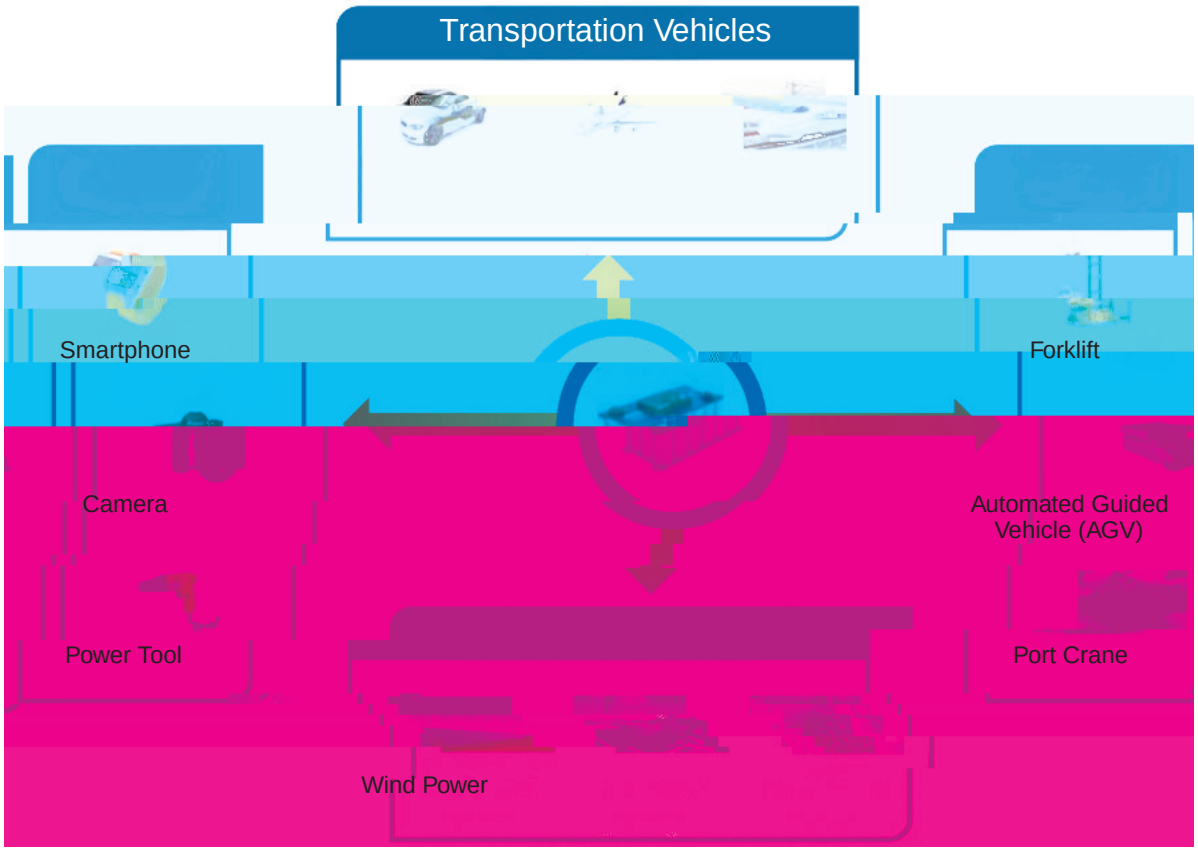

Products	Main Specifications	Characteristics	Applications
Wet Process Separator 	. Thickness: 3–25m . Breathability: 70–500s . Porosity: 30%–60% . Puncture strength: 300+gf	. Diverse designs . Uniform pore size distribution . Good permeability . High porosity . High strength	Used in batteries for EVs, power tools and high-end digital devices
Coated Separator 	. Thickness: 5–25m . Breathability: 100–400s . Porosity: 30%–60% . Puncture strength: 400+gf	. High thermal stability . Improved electrolyte . Wettability . High electrochemical stability . Low impedance . Customizable coating morphology	Used in power, digital and energy storage batteries with higher safety requirements

Dry Process Separators

Our dry process separators typically have a thickness range of 3–40 m, a breathability of 120–150s and a porosity range of 30%–60% and a puncture strength of 200gf or above based on the thinnest specification. Dry process separators typically have a high melting point at 160–175°C and a less than 5% horizontal thermal shrinkage rate at 120°C. The high shutdown and melting points and low thermal shrinkage rate give our dry process separators strong anti-oxidation resistance and high thermal stability, and therefore excellent safety performance.

Our dry process separators are particularly suitable for batteries with high safety requirements, such as lithium iron phosphate (LFP) batteries that are primarily used in electrical energy storage and NEVs, and lithium cobalt batteries used in consumer electronics.

Wet Process Separators

Our wet process separators typically have a thickness range of 3–25 m, a breathability of 70–500s and a porosity range of 30%–60% and a puncture strength of 300gf or above based on the thinnest specification. Our wet process separators typically have a shutdown temperature at 130–155°C, a melting point at 135°C and a less than 5% horizontal thermal shrinkage rate at 105°C. Our wet process separators typically have a uniform pore size and even pore distribution, which is critical to allow a uniform ion current throughout the battery. Such properties allow our wet process separators to possess ideal thickness, chemical stability, tensile strength and permeabilit78.mcturrocthCst29 24 0 TD .d6ru4

Coated Separators

The table below sets forth the breakdown of the sales volume and average selling price by product category for the periods indicated:

	Year ended 31 December									Nine months ended 30 September					
	2022			2023			2024			2024			2025		
	Revenue	Sales volume	Average selling price	Revenue	Sales volume	Average selling price	Revenue	Sales volume	Average selling price	Revenue	Sales volume	Average selling price	Revenue	Sales volume	Average selling price
		thousand m^2	RMB per m^2		thousand m^2	RMB per m^2		thousand m^2	RMB per m^2		thousand m^2	RMB per m^2		thousand m^2	RMB per m^2
Dry Process Separators	522,543	667,811	0.78	675,727	1,194,164	0.57	469,995	1,342,354	0.35	367,159	952,989	0.39	360,632	971,636	0.37
Wet Process Separators	454,116	315,771	1.44	469,107	443,937	1.06	495,103	610,979	0.81	391,882	466,014	0.84	458,925	628,523	0.73
Coated Separators	1,890,059	719,254	2.63	1,837,029	890,429	2.06	2,541,055	2,032,612	1.25	1,818,775	1,380,012	1.32	2,112,053	1,806,757	1.
Total	2,866,718	1,702,836	1.68	2,981,863	2,528,530	1.18	3,506,153	3,985,945	0.88	2,577,816	2,799,015	0.92	2,931,610	3,406,916	0.86

In 2024, we accounted for a market share of approximately 25.6%, and ranked first in the global dry process battery separator market. At the same year, we also ranked second in the global wet process battery separator market, accounting for a market share of approximately 11.0%.

OUR CORE TECHNOLOGIES

According to Frost & Sullivan, we are the first and one of the few enterprises in China with capabilities in all three types of lithium-ion battery separator production technologies, namely dry process, wet process and coated process separators. With in-house experts across various disciplines, we have independently developed a series of key technologies in relation to the manufacturing of lithium-ion battery separators, such as the microporosity forming technology, nanofibre coating technology. Utilising the core technologies that we developed, we have also designed key manufacturing equipment in-house.

We have also developed key solid-state battery technologies, including solid-state electrolyte membranes and semi-solid-state electrolyte separators. Using these advancements, we have achieved significant progress in both areas.

We are leveraging our expertise in battery separators to expand into functional membranes, making advances in heat exchange, waterproof and breathable, and water treatment membranes.

Lithium-ion Battery Separator Technologies

Microporosity Forming Technology

Producing lithium-ion battery separators involves forming a microporous structure,

When producing dry process separators for lithium-ion batteries, uniaxial stretching is used to create a microporous structure by stretching a precursor film in one direction. We are the first Chinese company to master the dry process uniaxial stretching technology and thus become the first domestic enterprise to achieve mass production of dry process separators, breaking the monopoly of overseas enterprises. Our corresponding research result won the First Prize of State Science and Technology Progress Award in 2024 and the First Prize of Science and Technology Progress of Ministry of Education ( ) in 2023. It was also certified as International Leading Level Technological Achievement by Sichuan Institute of Scientific and Technological Information ( ). With this proprietary technology, our dry process separators feature a high melting point of 160–175°C and minimal thermal shrinkage of less than 5% at 120°C, providing excellent thermal stability and st

Taking advantage of our advanced nanof coatology, our nanofibpe coated separators offer high temperatupe pesistanceigh strength and fast wettability, effectively

Semi-Solid-State Electrolyte Separator Technology

A semi-solid-state electrolyte separator is an important component in semi-solid-state batteries, acting as an intermediate technology between conventional liquid electrolyte batteries and solid-state batteries. Semi-solid-state electrolyte separators are produced using advanced composite coating and integrated moulding technologies. Composite coating involves applying a semi-solid electrolyte onto a separator substrate to enhance ionic conductivity and stability. Integrated moulding combines fibre frameworks with solid electrolytes, resulting in high strength, high lithium-ion conductivity and low interfacial impedance. Semi-solid-state electrolyte separators are essential for semi-solid-state batteries because they enhance safety by reducing the risk of leaks and fires associated with liquid electrolytes. They also improve energy density, leading to more powerful and longer-lasting batteries. Additionally, these separators offer better ionic conductivity and mechanical strength, which boosts overall battery performance and durability. They are cost-effective, utilising existing lithium-ion battery manufacturing processes, and serve as a crucial bridge between current lithium-ion batteries and future solid-state batteries, facilitating technological advancements.

Our semi-solid-state electrolyte separators, with a thicknesses range of 3–20 m, are engineered for high-performance EVs, drones and robots. These separators feature superior low-temperature performance, enhanced safety profiles and low interface resistance, making them ideal for advanced battery solutions. For example, our LATP electrolyte membrane demonstrates excellent low-temperature performance, with an improvement of around 8% in low-temperature cycling at –25°C as compared to current lithium-ion battery separators, surpassing that of most separators, which typically exhibit capacity retention losses exceeding 10 to 15% under the same conditions. Our semi-solid-state electrolyte separator products have been designed to c12uu4(a)1(nallo)-858.3(igrlyt)-4-stateLitosi91.94(di

In future, we plan to offer LATP-coated, PEO-coated and gel electrolyte composite separators, all of which are compatible with current semi-solid-state battery designs. We intend to launch LATP-coated and PEO-coated separators in the end of 2025, and we plan to launch gel electrolyte composite separators in the fourth quarter of 2026. Our production capabilities support large-scale manufacturing, enabling a steady supply to meet growing industry demand. The table below sets forth certain details of our semi-solid-state electrolyte separators.

Products Series	Main Specifications	Characteristics	Applications	Current Stage
LATP-coated Separator	. Thickness: 7–15m . Breathability: 90–250s . Porosity: 38–60% . Puncture strength: 50–80gf	. Ultra-thin and lightweight . Excellent heat resistance . High energy density . Excellent low- and high-temperature performance . High cycling stability . High safety	Batteries for EVs, consumer electronics, energy storage facilities, drones and humanoid robots	Capable of mass production
PEO-coated Separator	. Thickness: 9–14m . Breathability: 1,000–20,000s . Porosity (substrate): 35–50% . Puncture strength: >50gf	. Highly reductive resistant . Compatible with lithium-ion metal interface . 100% polymer-coated surface, with high Gurley value and low impedance . High puncture safety . Excellent high-temperature cycling	Batteries for high-safety home energy storage systems and electric two-wheelers	Capable of mass production
Gel Electrolyte Composite Separator	. Thickness: 3–7m . Breathability: 30–100s . Porosity: 50–70% . Puncture strength: >30gf	. Combines ultra-thin profile with high mechanical strength . Suitable for automated mass assembly . Excellent wettability . Can be made from higher heat-resistant polypropylene material	High-safety EV batteries	Under testing stage

Solid-State Electrolyte Membrane Technology

As a solid ionic conductor, solid-state electrolyte membrane is a key component in solid-state batteries, replacing the liquid electrolytes typically found in conventional lithium-ion batteries. The manufacturing of solid-state electrolyte membrane mainly involves fibre nanofication and pre-dispersion, solid electrolyte dispersion and grinding, mixing pulping, wet integrated forming, drying film formation, and other steps. Typically, we use integrated moulding technology to combine the fibre framework and solid electrolyte, which features high strength, high lithium-ion conductivity and low interfacial impedance. This addresses the bottleneck issue in the production of the

solid-state electrolyte membrane — poor contact between solid electrolytes and electrodes, leading to slow kinetics, and chemo-mechanical issues that cause contact loss or interphase formation, reducing efficiency. Solid-state electrolyte membranes play a critical role in the advancement of solid-state battery technologies, offering a range of important benefits. By replacing flammable liquid electrolytes, they greatly improve safety, effectively reducing the risks of leakage and fire. Their design allows for the use of lithium metal anodes, which deliver significantly higher energy densities than conventional graphite anodes. This contributes to the development of lighter, more powerful batteries. In addition, these membranes provide superior mechanical and thermal stability, resulting in batteries that are both longer lasting and more reliable over time. Solid-state batteries equipped with these membranes can achieve higher power densities and support faster charging, significantly boosting overall performance. The adoption of solid-state technology also enables innovative battery configurations, including flexible and bipolar designs, which are essential for future applications in consumer electronics, transportation vehicles and energy storage.

In the battery industry, solid-state electrolyte membranes mainly face two major technical challenges. Firstly, the production process is highly demanding, making large-scale manufacturing difficult and resulting in extremely high costs. Secondly, achieving thin membranes is technically challenging, and it is generally difficult to reduce the thickness of solid-state electrolyte membranes to below 30 μm. By using integrated forming technology for production, we believe our electrolyte membrane overcomes the difficulties of mass-production, enabling large-scale manufacturing for future applications and advancing the rapid commercialisation of solid-state batteries. Furthermore, this integrated forming technology allows for further membrane thinning, enhancing the energy density of solid-state batteries.

We design solid-state electrolyte membranes with a thicknesses range of ≤ 30 μm, targeting high-end digital and power battery sectors. Our proprietary integrated moulding technology combines a robust fibre framework with cutting-edge solid electrolytes, resulting in membranes offering high mechanical strength, impressive lithium-ion conductivity and low interfacial impedance. For instance, we have developed an integrated, self-developed solid-state electrolyte membrane features a tensile strength of

Functional Membrane Technologies

In addition to our traditional lithium-ion battery separators, we intend to provide customers in other fields with various kinds of functional membranes, primarily including heat exchange membranes, waterproof and breathable membranes and water treatment membranes. Currently, all of our functional membranes below are fully developed and ready for market launch. We plan to launch the following products as soon as wJfiin-345.6(sc)-5.2(h)-n

through which we gain access to the latest knowledge and technologies in polymer materials, new energy, nanotechnology, lithium-ion battery and semi-solid-state and solid-state battery.

We continue to invest substantial capital in R&D and innovation. For the years ended 31 December 2022, 2023 and 2024 and the nine months ended 30 September 2024 and 2025, our research and development expenses amounted to RMB207.3 million, RMB242.5 million, RMB248.0 million, RMB175.7 million and RMB201.0 million, respectively, representing 7.2%, 8.1%, 7.1%, 6.8% and 6.9% of our revenue for the same periods, respectively.

Our leading R&D capabilities have enabled us to independently develop a series of key technologies. See "—Our Core Technologies" in this section. Our achievements in R&D have been recognised by the market, governmental authorities and industry associations.

Our Global R&D Centres

Headquartered in Shenzhen, we have established domestic and overseas R&D centres to gain access to frontier technologies. Domestically, our Shenzhen R&D headquarter focuses on mainstream lithium-ion battery separator technology and cutting-edge membrane product development, while our Nantong R&D centre, collaborating closely with our manufacturing bases in Eastern China, devoted itself to the refinement of the mass production process. Internationally, our Japan R&D centre leverages local advantages in fine chemicals to delve into high-end coating technology, while our Sweden R&D centre takes advantage of the precision equipment in Europe to develop customised products. Our global R&D network has allowed us to achieve breakthroughs in the key production technologies and manufacturing equipment, which laid a solid foundation for the development of cutting-edge lithium-ion battery separators, functional membranes and other advanced membrane products.

The table below sets forth certain details of our global R&D centres.

R&D Centre	Details	Highlights
Domestic Research and Development Centres		
Frontier Technology Research Institute ( )	Located at Shenzhen, China Established in 2022	. Focus on the development of key materials and key technologies for lithium-ion battery separators, such as electrolyte membranes, electrocatalytic membranes and ultra-light membranes . Explore new product application fields and industrialise new products, including hollow fibre membranes and water treatment membranes
Membrane Technology Research Institute ( )	Located at Shenzhen, China Established in 2011	. Focus on the design and development of mainstream lithium-ion battery separator materials and products . Responsible for the development and implementation of annual plans for product and technology advancement across various research institutes and manufacturing bases
Equipment Centre ( )	Located at Shenzhen, China Established in 2015	. Focus on the development and design of new equipment, as well as the selection, introduction, installation and commissioning of new production lines . Carry out technical improvement and equipment-related management at our manufacturing bases . Responsible for the planning and layout of new manufacturing bases

R&D Centre	Details	Highlights
Eastern China Technology Research Institute ( )	Located at Nantong, China Established in 2023	. Provide technical services for manufacturing bases in Eastern China . Focus on the R&D of adhesive products, aramid products, thin high-strength substrates and heat-resistant products . Responsible for the preparation of product samples and their transition into mass production . Collaborate with universities and research institutions on the simulation and design of certain parts of our process production line
Overseas Research and Development Centres		
Senior Osaka Japan Research Institute Joint-Stock Company ( )	Located in Osaka, Japan Established in 2017	. Focus on the development of advanced membrane technologies on solid-state electrolyte membranes and semiconductor materials . Leverage local advantages in fine chemicals such as high-performance ultra-high molecular weight PE and solid PEO-PPO materials
Senior Europe Research Institute ( )	Located in Eskilstuna, Sweden Established in 2023	. Design high-end customised products for European customers, including industry leading lithium-ion battery suppliers in France and Germany

Our R&D Platforms

Our R&D platforms comprise in-house R&D pl

In-House R&D Platforms

- Duration. Typically spans a period of two to five years, depending on the agreed project scope. Agreement can be renewed through negotiation upon determination.

- Confidentiality. Parties are typically required to treat any commercial and technical information which is not yet known to the public as a trade secret and with strict confidence.

- Allocation of Costs Typically, we make payments in stages to the academic institutions based on the progress of the R&D as specified in the agreement.

In addition to collaborations with domestic academic institutions, we have further established strategic partnerships with several key customers which are renowned overseas lithium-ion battery manufacturers. We typically develop the production processes and the product specifications based on specific needs of these key customers to ensure we meet their requirements as well as the stable supply and high performance of our products. Moreover, we actively collaborate with potential suppliers and other research institutions on the R&D of lithium-ion battery separators.

The salient terms of our joint research and development agreement with our customers, potential suppliers and other research institutions typically include the following.

- Ownership of Intellectual Property Rights Each party retains ownership of its pre-existing intellectual property. Ownership of jointly developed intellectual property is determined as contractually agreed.

- Duration. Typically spans a period of one to five years, depending on the agreed project scope.

- Confidentiality. Parties are typically required to treat any commercial and technical information involved as a trade secret and with strict confidence, which may be extended for a specified period after the termination of the agreement.

- Allocation of Costs Generally shared by participants as contractually agreed.

SALES AND MARKETING

As our customers are located in different countries and regions, we plan, organise and participate in marketing activities through a combination of online and offline channels. We promote our products and brand through our website and brochures, organise or co-host marketing conferences, participate in domestic and overseas industry exhibitions and meetings, attend customer-supplier conferences and organise online communication with major customers from time to time. For marketing in overseas markets, we have set up offices and subsidiaries in Japan, Malaysia, Singapore and Sweden to conduct diversified marketing and customer service activities. Specifically, in China, We solicits new customers

primarily by participating in trade exhibitions and through online promotion, such as official social media accounts. In overseas markets, new customers are acquired mainly via promotional activities on platforms such as LinkedIn.

We invest in sales and marketing to strengthen our leadership position in the lithium-ion battery separator manufacturer industry and promote our products and services. For the years ended 31 December 2022, 2023, 2024 and the nine months ended 30 September 2024 and 2025, our selling expenses amounted to RMB43.8 million, RMB38.7 million, RMB37.1 million, RMB24.3 million and RMB27.9 million, respectively, representing 1.5%, 1.3%, 1.1%, 0.9% and 1.0% of our total revenue during the same periods.

Sales Network

During the Track Record Period, we sold our products primarily through direct sales to customers, which are primarily domestic and overseas manufacturers of lithium-ion batteries including LG Energy Solution, Samsung SDI, AESC, Murata, SK On, SAFT, CATL, BYD, Gotion High-tech, CALB, EVE Energy and Sunwoda. Through direct sales, we have established close and direct connection with our customers and are able to gain firsthand understanding of customers' technologies and business development plans, propose technical solutions and product solutions and help customers solve problems.

Given our business expansion, we manage our sales andelp5.4(tabl)-6.6(ish2cu)-t-4.3(n(r)-5(rima

pr oductiEE ssales-0487.4(o-.4(f)048761(o)-4(ur)-896.5(ift)-5.7fr)-5(etren)-4(f)048761(c)-5.2u(st

mens pr We cu stomers

rk grel(mens.)]TJ /F72 1 Tf-35 .0215 -2.3641 TD05 Tc1(.TjJ /F62 1 Tf 2.1831 0 TD .0226 Tc [(Dar)-5.8(a

Tc [invo(c((s)-351.8(r)-5(ssuke)-5(h)-350.4toh)-350.4c(sr)-525(t)-.3tomers.(in)-349.5180y .

DOCUMENT, INfPLETE,CHANGE,

BoCWARNING'

. Return and exchange policyCustomers shall inspect and examine the products before the acceptance. In case any defect is discovered, the customer has the

During the Track Record Period, we primarily sold coated separator products to the United States. The amounts of our separator products sales to the United States is RMB0.5 million, RMB1.6 million, RMB9.9 million a nd RMB44.3 million in 2022, 2023, 2024 and the nine months ended September 30, 2025, respectively.

Quality Warranty

Our warranty period is typically 12 months but may vary depending on the product type, product quantity and local regulatory requirements. During the warranty period, our customers may request our technical specialists to replace defective parts and components

We formulate our sales and marketing strategies annually based on our strategic objectives, business performance goals, market environment and customer relationships. Following our annual sales and marketing strategies, we set and assign sales and marketing targets on a monthly and quarterly basis. In addition, we have established a performance evaluation mechanism to conduct regular performance evaluations and provide incentives for the sales and marketing personnel.

CUSTOMERS

Our major customers are primarily lithium-ion battery manufacturers. We derived substantially all of our revenue from the sales of our lithium-ion battery separators during the Track Record Period.

As our products are applicable to lithium-ion batteries for a wide range of end use, including transportation vehicles, electrical energy storage facilities, industrial machinery and consumer electronics, we have a broad and diverse customer base. With the active expansion of our domestic and overseas business in recent years, our customers comprise of leading lithium-ion battery manufacturers both in China and abroad. Our major customers include LG Energy Solution, Samsung SDI, AESC, Murata, SK On, SAFT, CATL, BYD, Gotion High-tech, CALB, EVE Energy and Sunwoda.

In the years ended 31 December 2022, 2023, 2024 and the nine months ended 30 September 2025, our top five customers in each period together generated RMB1,932.1 million, RMB1,903.5 million, RMB1,785.9 million and RMB1,805.0 million of revenues, respectively, accounting for 67.4%, 63.8%, 50.9% and 61.5% of our total revenue, respectively. In 2022, 2023, 2024 and the nine months ended 30 September 2025, revenue from our largest customer in each perio

Rank	Customer	Products Sold	Transaction Amount (RMB in millions)	Percentage of Total Revenue (%)	Business Relationship Since	Business Background	Credit Term
4	Customer G	dry process and coated separators	242.7	8.1	2010	Headquartered in China, a company specialising in the research, development, production, and sales of lithium-ion batteries	90 days
5	Customer D	wet process and coated separators	223.0	7.5	2015	Headquartered in China, a company specialising in the research, development, production, and sales of lithium-ion batteries and related materials	120 days
For the Year Ended 31 December 2024							
1	Customer A	dry process, wet process and coated separators	460.4	13.1	2012	Headquartered in South Korea, a company operating in various industries, including electronics, chemicals, telecommunications, and services	90/135 days
2	Customer C	dry process, wet process and coated separators	373.0	10.6	2008	Headquartered in China, a company specialising in the manufacture of EVs and batteries	60 days
3	Customer B	dry process, wet process and coated separators	337.3	9.6	2017	Headquartered in China, a company specialising in the research, development, production, and sales of lithium-ion batteries	90 days
4	Customer H	dry process, wet process and coated separators	311.1	8.9	2019	Headquartered in China, a company specialising in the research, development, production, and sales of lithium-ion batteries and related materials	120/180 days
5	Customer D	dry process, wet process and coated separators	304.0	8.7	2015	Headquartered in China, a company specialising in the research, development, production, and sales of lithium-ion batteries and related materials	120 days

Rank	Customer	Products Sold	Transaction Amount (RMB in millions)	Percentage of Total Revenue (%)	Business Relationship Since	Business Background	Credit Term
For the Nine Months Ended 30 September 2025							
1	Customer B	dry process, wet process and coated separators	434.9	14.8	2017	Headquartered in China, a company specialising in the research, development, production, and sales of lithium-ion batteries	90 days
2	Customer C	dry process and coated separators	386.4	13.2	2008	Headquartered in China, a company specialising in the manufacture of EVs and batteries	60 days
3	Customer A	dry process, wet process and coated separators	367.4	12.5	2020	Headquartered in China, a company specialising in the manufacture of EVs and batteries	60 days

During the Track Record Period and up to the Latest Practicable Date, we were in

The following table sets forth the details of our top five suppliers for each period during the Track Record Period.

Rank	Supplier	Products Procured	Transaction Amount (RMB in millions)	Percentage of Total Purchase (%)	Business Relationship Since	Business Background	Credit Term
For the Year Ended 31 December 2022							
1	Supplier A	Thermal plastic	149.8	15.8	2013	Headquartered in South Korea, a company specialising in the production of petrochemical products	Prepayment in full
2	Supplier B	Slurry	135.3	14.3	2019	Headquartered in China, a company dedicated to acting as an import and export agent for new materials in the fine chemicals sector	30 days after receipt of products
3	Supplier C	Thermal plastic	77.8	8.2	2021	Headquarter in China, a company specialising in the research, development, production, and sales of advanced materials	90 days after the end of each month
4	Supplier D	Thermal plastic	54.9	5.8	2020	Headquartered in South Korea, a company with business operations covering petrochemicals, chemical materials, energy, and related fields	Prepayment in full
5	Supplier E	Slurry	38.8	4.1	2019	Headquartered in China a company specialising in the research, development, manufacture and sale of inorganic materials used in safety coating materials for separators	60 days after the end of each month
For the Year Ended 31 December 2023							
1	Supplier A	Thermal plastic	208.5	19.8	2013	Headquartered in South Korea, a company specialising in the production of petrochemical products	Prepayment in full
2	Supplier D	Thermal plastic	147.7	14.0	2020	Headquartered in South Korea, a company with business operations covering petrochemicals, chemical materials, energy, and related fields	Prepayment in full

Rank	Supplier	Products Procured	Transaction Amount (RMB in millions)	Percentage of Total Purchase (%)	Business Relationship Since	Business Background	Credit Term
3	Supplier F	Thermal plastic, hardware accessories	53.4	5.1	2019	Headquartered in Japan, a company specialising in the research, development and production of high-purity chemicals, functional films, and precision materials for use in semiconductors, display panels (LCD/ OLED), photovoltaics, and electronic components	Prepayment in full
4	Supplier B	Slurry	46.0	4.4	2022	Headquartered in China, a company specialising in the research, development, production, and sales of chemical products	30 days after receipt of products
5	Supplier E	Slurry	44.2	4.2	2019	Headquartered in China a company specialising in the research, development, manufacture and sale of inorganic materials used in safety coating materials for separators	60 days after the end of each month
For the Year Ended 31 December 2024							
1	Supplier D	Thermal plastic	210.6	13.0	2020	Headquartered in South Korean, a company with business operations covering petrochemicals, chemical materials, energy, and related fields	Prepayment in full
2	Supplier A	Thermal plastic	184.8	11.4	2013	Headquartered in South Korea, a company specialising in the production of petrochemical products	Prepayment in full
3	Supplier B	Slurry	141.4	8.7	2022	Headquartered in China, a company specialising in the research, development, production, and sales of chemical products	30 days after receipt of products
4	Supplier E	Slurry	117.9	7.3	2019	Headquartered in China, a company specialising in the research, development, production, and sales of advanced materials	60 days after the end of each month
5	Supplier G	Thermal plastic	60.7	3.8	2020	Headquartered in China, a company mainly engaged in the sales and service of chemical products	Prepayment in full

Rank	Supplier	Products Procured	Transaction Amount (RMB in millions)	Percentage of Total Purchase (%)	Business Relationship Since	Business Background	Credit Term
For the Nine Months Ended 30 September 2025							
1	Supplier D	Thermal plastic	207.9	16.3	2020	Headquartered in South Korea, a company with business operations covering petrochemicals, chemical materials, energy, and related fields	Prepayment in full
2	Supplier A	Thermal plastic	148.5	11.6	2013	Headquartered in South Korea, a company specialising in the production of petrochemical products	Prepayment in full
3	Supplier B	Slurry	145.8	11.4	2022	Headquartered in China, a company specialising in the research, development, production, and sales of chemical products	

Procurement Agreement

Generally, we enter into procurement agreements with suppliers and place purchase orders based on actual production needs. The key terms in our procurement agreements typically include:

- Duration. The term of our agreement is typically three years.
- Material. We shall list out the type, specifications, date of delivery and quantity of required materials in each purchase order.
- Price. Depending on the type of materials and suppliers involved, prices can either follow the procurement agreement or be adjusted according to the then-prevailing market price.
- Warranty. Our suppliers typically provide us with a warranty period between six to twelve months.
- Inspection and returns. Product inspection shall be carried out upon delivery. We have the right to return defective materials that fail to meet agreed quality standards, and the supplier shall provide remedies, including returns and/or exchanges.
- Credit terms and payment. Credit terms and payment methods shall be outlined in the purchase orders. We are generally granted certain credit terms, which is normally within 90 days.
- Confidentiality and anti-corruption. We typically include confidentiality provisions in our agreements, with confidentiality obligations potentially extending beyond agreement expiration.
- Termination. The agreements will be terminated upon expiration. We are also entitled to terminate the agreement if the supplier fails to observe their obligations in the agreement.

During the Track Record Period and up to the Latest Practicable Date, we did not experience any breach of agreements by suppliers that resulted in suspension or interruption that would cause a material and adverse effect to our production operations. During the Track Record Period, we did not experience any significant shortage of raw material supplies, and the raw materials provided by our suppliers did not have any significant

1 alaimTJ 32emtions)-4lies4.1(.1(06-6.00)-481.2(a)-4.3(n1(bha)e)-48 361ions)]TJ -7/F2 14.1(v)ac4.lsiu756gP-4.lsa56g

Due to factors such as fluctuations in material prices, changes in market supply and demand dynamics, and technological advancements, our procurement prices and quantities may vary. For details, see "Risk Factors — Risks Relating to Our Business and Industry — Price fluctuations and inadequate supply of raw materials, energy, transportation and other necessary supplies or services may impact our business, financial condition and results of operations."

Supply Chain Management

To minimise any potential interruptions to our operations due to supply of main raw materials, we analyse market supply and demand based on actual orders and historical data. We then conduct forward planning before negotiating with suppliers and place purchase orders. Meanwhile, we usually keep a reasonable level of inventory of main raw and auxiliary materials each year. In addition, we have developed a supplier selection and evaluation procedure and maintain a list of qualified suppliers each year to ensure that the supply of main raw and auxiliary materials will not be affected by any unforeseeable circumstances. See "— Quality Management — Raw Materials."

To mitigate risks related to raw material price fluctuations, we have established a monitoring system to promptly monitor price changes of key raw materials. We ensure material supply and optimise procurement costs through strategies such as advance procurement. Additionally, we maintain supply chain safety and stability through partnerships and long-term agreements with our suppliers.

Manufacturing Equipment

We use manufacturing equipment that is highly compatible with our proprietary production techniques. According to Frost & Sullivan, we are one of the few companies with independent equipment research and design capabilities. The self-designed manufacturing equipment enables us to produce differentiated separators and ensures our product quality as well as production efficiency. See "— Our Core Technologies — Manufacturing Equipment Designed In-House." We engage international manufacturers for the production of manufacturing equipment based on our technology design. We provide the manufacturing process parameters, manufacturing process requirements and project timetable to the manufacturers, and we specify to the manufacturers our quality and technical standards as well as acceptance standards to ensure that the equipment meets our production requirements.

MANUFACTURING

Manufacturing Processes

The manufacturing processes of lithium-ion battery separators are mainly categorised by three different manufacturing techniques: the dry process, the wet process and the coating process, whereas coating refers to an additional process applied in base film separators produced from both dry and wet processes. We adopt a "make-to-order" strategy to process customer orders and have developed an ISO production process management control system. After an order is placed by a customer, we will develop a

production plan with customised raw material formulas, arrange for procurement of raw materials based on the plan, produce separators with suitable processes, conduct comprehensive product quality checks and deliver our products to customers. This allows us to manage our production cost and improve our operating efficiency.

Dry Process

The dry process is a solvent-free, physical pore formation technology. We start by melting the thermal plastics such as PP or PE. The melted polymer is then extruded into a thin sheet of crystalline polymer membrane and subjected to rapid drawdown. The crystalline polymer membrane is then annealed at a temperature below its melting point to

The diagram below illustrates the workflow of the wet process.

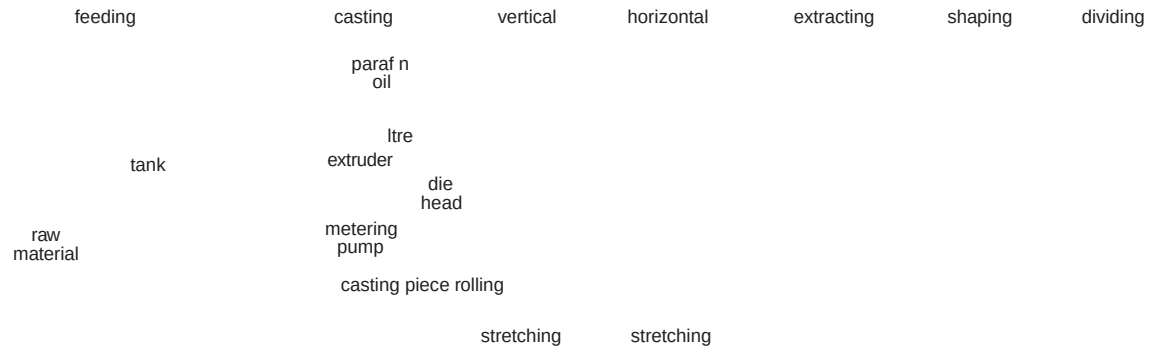

Coating Process

Coating process is an additional manufacturing process for both dry and wet process separators. By applying slurry such as ceramic alumina and PVDF adhesive to one or both outer surfaces of the base film, the coating can significantly enhance the thermal stability, puncture strength and safety of the base film. Separators with these enhanced properties will improve the performance and safety of the lithium-ion batteries.

The diagram below illustrates theworkflow of the coating process.

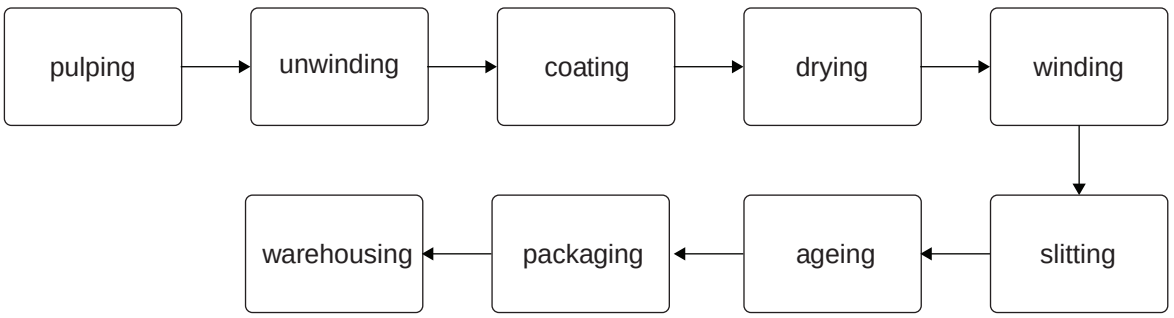

Manufacturing Facilities

We have established a network of manufacturing facilities in different parts of China to provide our target customers with comprehensive services using localised supply and supporting facilities. During the Track Record Period, we did not outsource any manufacturing process to third parties.

Our continued expansion of production capacity during the Track Record Period is a strategic response to rising customer demand and intense market competition, as demonstrated by similar capacity increases among our competitors in recent years, according to Frost & Sullivan. Localised production enhances our relationships with major battery manufacturers by enabling prompt and cost-effective service, while also allowing us to adapt quickly to changes in demand in both domestic and overseas markets. We believe that our advanced, innovation-driven facilities and optimised capacity empower us to achieve economies of scale and control production costs effectively.

The table below sets forth details of our manufacturing bases as at 30 September 2025:

No.	Manufacturing base	Location	Year of commencing production	Area (m^2)	Production capacity (m^2 in million)	Primary products
1	Shenzhen manufacturing base					

The table below sets f the details of e manufacturing fadlities that are under construction as at 30 September 2025:

No.	Manufacturing Base Facility (Location)	Total Construction Area (m^2)	Status	Estimated Annual Production Capacity	Estimated Commencement Time of Mass Production	Key Functions
1.	U.S. manufacturing base in Nor0n Carolina	48,000	Under construction	580.0 million square metres	End of 2026	Production of coated separators
2.	Malaysia manufacturing base in Penang	267,000	Under construction	2.0 billion square metres	First Half of 2027	Production of wet process separars ad coated separators
3.	Sweden manufacturing base in Eskilstuna	200,000	Under construction	300.0 million square metres	End of 2026	Production of wet process separars ad coated separators

During the Track Record Period, our continuous expansion of production capacity in China has been driven primarily by various factos. First, each of our production facilities in China has reached a relatively high level fo utilisation, wi0n annual utilisation rates consistently ack Record Period, one of the highest among urers, accordig Forest and Sullivan. Secondly, we have n in demand from our customers, necessitating the construction in China. Lastly, when deciding on the location of our domestic oritise factors such as raw material and product transportation s, customer proximity, and local policy support. As a result, our entrated ma inly in the Eastern and Southern China.

Equipment and Machinery

Our manufacturing equipment and machinery are essential for enhancing product quality and cost competitiveness. The main equipment and machinery used in our manufacturing bases are self-owned. The table below set forth certain information about our main production equipment:

Machine Name	Key Features	Usage
Oil Coating Line	. Enhances product performance . With three self-developed patents	. Applies functional coatings to enhance product performance
Edge Collection Machine	. High stability . With two self-developed patents	. Collects edge waste generated during production for winding and disposal

QUALITY MANAGEMENT

We adopted a stringent production control system to maintain the effectiveness of our business operation and the quality of our products. We have established a comprehensive quality management system, which had obtained ISO 9001 quality management system certification, and implemented MES system to monitor product process quality. Our Directors believe that an effective control system is essential for us to produce products in high quality and sustain our relationship with customers for the long-term.

As at 30 September 2025, our Group had 896 quality control staff, who are responsible for quality control in various aspects, including incoming raw materials quality control, SMT control, overall quality control, assembly process, finished products. Our quality control department is responsible for identifying quality control issues and providing solutions to address such issues.

Product quality is vital to our business, since any potential quality defect may cause significant risks to customers who apply our products to their lithium-ion batteries. The consistency in our product quality and our ability to satisfy customised needs are the driving force to the rapid growth of our business. We have implemented a comprehensive and stringent quality management system to ensure that we comply with applicable industry and national standards and regulations. We maintains product liabilities insurance in relation to product quality issues. See "Risk Factors — Risks Relating to Our Business and Industry — We may be subject to risks associated with our product quality." During the Track Record Period, we have not received any material complaints relating to product quality, and we had not experienced any material accidents due to product defects or recalled any products.

WAREHOUSING AND LOGISTICS

Our warehouse management personnel maintain policies in relation to warehouse management. We separate our warehouse into three segments: the finished product warehouse, work-in-progress warehouse and the raw and auxiliary materials warehouse, each equipped with the required lighting, ventilation, temperature and humidity level. We store raw materials, work-in-progress and finished products separately according to their properties and usages to prevent mix-up of materials and products and ensure their safety and quality.

We engage qualified third-party logistics service providers for the delivery of all

- Scope of services.Employment agents shall provide qualified outsourced personnel according to our schedule, ensure medical clearance with genuine reports, handle training and assessments, deploy personnel to our designated location, manage all matters related to the outsourced staff during their assignment and provide other reasonable services in relation to the labour dispatch.

- Pricing. We apply different hourly-based salary rates for dispatched personnel depending on their specific roles.

- Duration. The typical contract duration ranges from one to three years.

- Recruitment standards.Employment agents must not use improper means to recruit labour dispatch personnel.

- Termination. Either party may terminate the agreement in advance under the specific circumstances, such as natural disasters, stipulated in the contract with the notice period upon negotiation.

Our PRC Legal Advisor is of the view that the terms above in the labour dispatch arrangement does not violate prohibitive provisions on labour dispatch of the PRC.

We have implemented internal policies and monitoring procedures to ensure ongoing compliance with applicable labour dispatch laws and regulations, including requirements on the maximum permissible proportion of dispatch workers relative to total employees. Our human resources department conducts regular reviews of workforce composition and reports to management to confirm that the number of dispatch workers remains within the statutory limits.

We have not had any material labour disputes with our employees which might materially and adversely affect our business operations during the Track Record Period and up to the Latest Practicable Date.

PROPERTIES

Headquartered in Shenzhen, China, we own and lease properties in the PRC and overseas for the use of production facilities, warehouses and offices. As at the Latest Practicable Date, none of the properties held or by us had a carrying amount of 15% or more of our consolidated total assets. According to section 6(2) of the Companies (Exemption of Companies and Prospectuses from Compliance with Provisions) Notice, this document is exempt from the requirements of section 342(1)(b) of the Companies (Winding up and Mis10.5(pasd(Tlain)-4(e06(ou)-(ss)-26412(P)-374(rovi)-66(stion)-1(s))-694.4O(rdin)-4(a).9ns10
ioi r adderprrapa ofthe pdphedulhehe

Owned Properties

As at 30 September 2025, we owned the land use rights of 18 parcels of land in China and overseas, with a GFA of approximately 1.4 million square metres in aggregate. We use these properties as premises for production, warehousing, offices, R&D and other ancillary purposes. As at the Latest Practicable Date, our rights to use such construction land were lawful and valid, and there were no disputes or potenteaan8(po)-sh [(aSepte)-1.2(s)-261.2(o(ve8(or)

LICENCES AND APPROVALS

No.	Entity	Name of the licence, approval or permit	Expiry date
15	Nantong Senior	Record registration form of foreign trade dealers	N/A
16	Nantong Senior	Receipt of Customs Record of Consignee or Consignor of Import and Export Goods	N/A
17	Foshan Senior	Customs Registration Certificate	N/A
18	Foshan Senior	Pollution Discharge Permit	14 November 2029

AWARDS AND RECOGNITIONS

We have received numerous awards and recognitions for our brand, business operations, products, intellectual properties and corporate responsibility achievements.

Year	Awards/certifications	Awarding body
	Clean Benchmark Technology Award ( )	Advanced Battery Materials Industry Cluster ( )
	Certificate of Scientific and Technological Achievement Evaluation: International Advanced Level ( )	Guangdong Materials Research Society ( )
	Certificate of Scientific and Technological Achievement Evaluation: International Leading Level ( )	Sichuan Institute of Scientific and Technological Information ( )
	2022 Outstanding Brand in Lithium Battery Materials Technology (2022)	OFweek ( )
2022	2022 Influential China's Battery Industry (2022)	China battery network ( )
	China Plastic Group Standard Pioneer Award ( )	China Plastic Processing Industry Association ( )
	National Intellectual Property Demonstration Enterprise ( )	State Intellectual Property Office ( )
	Top 50 Projects of Strategic Emerging Industrial Clusters in the Guangdong-Hong Kong-Macao Greater Bay Area High-Value Patent Cultivation Layout Competition in 2022 (2022)	Executive Committee of the Guangdong-Hong Kong-Macao Greater Bay Area High Value Professional Cultivation Layout Competition ( )

COMPETITION

Promoted by favourable regulatory policies and rapid development in downstream application scenarios, the global battery separator market has achieved a remarkable growth in total shipment volume in recent years. According to Frost & Sullivan, the market

features that meet evolving customer needs, we are able to maintain a competitive edge even under market saturation. Innovation allows us to move up the value chain, targeting premium segments, and offering customised solutions that command higher margins. This strategic focus on innovation also helps us to respond proactively to emerging market trends and regulatory changes.

Product Differentiation and Competitive Positioning

The Group's products are differentiated from those of its peers in several key respects:

. Technological innovation: we leverage in-house R&D capabilities to launch innovative products, such as fifth generation wet process separators and other forward-looking products, which are designed to provide superior performance, safety, and efficiency.

. Customisation and service: we offer tailored product solutions and technical support to meet specific client requirements across different regions, helping to build close, long-term customer relationships.

. Global production network: With futTc (.)Tre nufactTc (.)Tring bases spanning Asia, North America, and Europe, we can deliver timely, cost-effective products to local markets, which enhances customer satisfaction and loyalty.

Strategies for Future Competition

Looking ahead, we intend to strengthen our position by further investing in overseas markets and continuously upgrading its product portfolio. We plan to:

. Accelerate the establishment and ramp

mechanism, expending the R&D team with specialists that possess cross-disciplinary expertise, and enhancing collaborations between industry, academia and research institutions.

. Pursue operational excellence and efficiency to ensure cost competitiveness. We will focus on optimising our manufacturing processes, adopting lean production practices, and leveraging automation and digital technologies. This will help to improve output quality, streamline supply chains, and lower production and operational expenses. Regular review and enhancement of operational protocols will be integral to minimising inefficiencies and maximising resource utilisation.

Measures to Stabilise Gross Profit Margin

Our gross profit margin amounted to 44.8%, 43.3%, 28.1%, 30.0% and 21.3% in 2022, 2023, 2024 and the nine months ended 30 September 2024 and 2025. To stabilise our gross profit margin, we intend to take the following measures:

. Gradually increase product prices

We plan to adjust the selling prices of our products, taking into account relevant market conditions, customer demand and our competitors' pricing strategies. We intend to optimise our pricing mechanism by actively adjusting prices of our battery separator products, while maintaining long-term and stable relationships with our major customers by improving our product quality.

. Optimise our product mix

We intend to optimise our product portfolio by gradually increasing the proportion of coated separator products which have relatively higher gross profit margins. Our coated separator products generally have higher gross profit margins than other separator products. See "Financial information — Description of Principal Consolidated Statements of Comprehensive Income Items — Gross Profit and Gross Profit Margin."

. Proactively expand our overseas markets

We plan to proactively expand our overseas markets, where the selling prices of our products are generally more favourable than in the domestic market. We intend to broaden our overseas customer base, increase direct sales to overseas customers and strengthen our cooperation with leading international battery manufacturers.

INSURANCE

We have in place the mandatory insurance policies required by PRC laws and regulations and in accordance with the commercial practices in our industry. We maintain property risks insurance to protect the loss of fixed assets such as machinery, equipment and inventory due to events such as theft and natural disasters. Our employee-related insurance consists of pension insurance, maternity insurance, unemployment insurance,

work-related injury insurance, medical insurance and housing provident funds. During the Track Record Period and up to the Latest Practicable Date, we did not file any material insurance claims in relation to our business. See "Risk Factors — Risks Relating to Our Business and Industry — Our insurance coverage may not be sufficient to cover all losses, which may increase our costs of operation."

LEGAL PROCEEDINGS AND COMPLIANCE

Legal Proceedings

We are currently, and may from time to time in the future, be subject to various legal or administrative claims proceedings arising from the ordinary course of business. Litigation or any other legal or administrative proceeding, regardless of the outcome, is likely to result in substantial cost and diversion of our resources, including our management's time and attention. See "Risk Factors — Risks Relating to Our Business and Industry — We may be involved in claims, disputes and legal proceedings in our ordinary course of business."

During September 2019 to November 2023, our Company and certain of our subsidiaries were sued against in the US and the UK by a competitor for alleged infringement, illegal acquisition of trade secrets and unfair competition. The competitor alleged that we (1) infringed certain of its patents and misappropriated its trade secrets related to battery separator manufacturing technologies; and (2) used the misappropriated trade secrets and the infringed patents to unfairly compete and gain market share from the competitor. The competitor requested the US and UK courts to grant injunction against

In addition, in 2022, we initiated a patent infringement litigation against certain PRC companies at the Shenzhen Intermediate People's Court (the "Shenzhen Court"), claiming RMB50.5 million in damages, alleging that the lithium-ion battery separator products manufactured by the defendants infringed our patent. In February 2023, the Shenzhen Court dismissed our claims.

In 2023, we discovered that a patent applied for by our competitor after one of our former employees joined them was highly relat

Corporation Pte. Ltd. to our manufacturing bases; (3) sales of equipment from Singapore Senior and INV Corporation Pte. Ltd. to our manufacturing bases; (4) sales of photovoltaic green energy from Senior Clean Energy (Nantong) Co. ( ), Ltd. and Senior Clean Energy (Changzhou) Co., Ltd. ( ) to Nantong Senior, Changzhou Senior and Jiangsu Senior and (5) capital transfer from Singapore Senior, INV Corporation Pte. Ltd., Shenzhen Senior, Senior Material Factory Holding AB and Senior Material Ultimate Holding (Europe) AB to INV New Material Technology (M) Sdn. Bhd., INV Corporation Pte. Ltd., Singapore Senior, Shenzhen Senior, Senior Material (Europe) AB and Senior Material Properties AB. We have engaged transfer pricing advisors to perform transfer pricing review on our cross-border intra-Group transactions during the Track Record Period to conduct benchmarking studies on the intra-Group transactions and ensure compliance with the relevant transfer pricing regulations and guidelines. The transfer pricing advisor is of the view, and our Directors concur, that the Group's relevant transactions were largely consistent and in compliance with the relevant transfer pricing regulations and the Organisation for Economic Cooperation and Development Transfer Pricing Guidelines for Multinational Enterprise and Tax Administrations during the Track Record Period in material aspects. Our Directors also confirm that, during the Track Record Period, neither the Company nor any of its subsidiaries were involved in any investigations or litigations relating to the transfer pricing issues in respect of any of the intra-Group transactions.

Legal Compliance

During the Track Record Period and up to the Latest Practicable Date, we had not been and were not involved in any material non-compliance incidents that would have a material adverse effect on our business, financial condition and results of operations. Our Directors and Legal Advisors are of the view that we have materially complied with the applicable laws and regulations in the jurisdictions in which we operate. The non-compliance incidents identified below, as well as the non-compliance identified in "— Properties" section, have not had, and are not expected to have any material adverse effect on our business, financial condition and results of operations. To the best knowledge of our Directors, the identified non-compliance matters have not had, and are not expected to have, any material adverse impact on our business, financial condition and results of operations.

Social Insurance and Housing Provident Funds

During the Track Record Period, we had not made social insurance and housing

that the amount of shortfall and penalties was immaterial and will not have a material

- Internal control measures.Establish an internal control team to monitor our ongoing compliance with the social insurance and housing provident fund contributions regulations and oversee the implementation of any necessary measures; and

- Consultation Consult our PRC Legal Advisor on a regular basis for advice on relevant PRC laws and regulations to keep us abreast of relevant regulatory developments; and actively communicate with relevant social insurance and housing fund local authorities to ensure we have the most updated information about the relevant laws and regulations concerning social insurance and housing provident fund.

violation of this provision may be ordered by the labour authorities to rectify within a specified time limit. Where rectification is not made within the stipulated period, the employers may be subject to a penalty ranging from RMB5,000 to RMB10,000 per dispatched worker exceeding the 10% threshold. However, during the Track Record Period, we had not been subject to penalty by any capable authorities due to the above non-compliance. As at the Latest Practicable Date, the proportion of our labour dispatched employees is less than 10% and complies with the requirements of the Interim Provisions on Labour Dispatch of the PRC.

ENVIRONMENTAL, SOCIAL AND GOVERNANCE

ESG Policy

We are deeply aware of our responsibilities regarding environmental protection and social responsibility, and recognise the impact that climate change related issues may have on our business operations. We are committed to complying with environmental, social and governance ("ESG") reporting requirements from the [REDACTED] Date. Our ESG Policy sets out our obligations and scope of authorities in performing the codes in Appendix C2 of the Listing Rules. We have established an ESG governance framework covering the Board, the ESG Office and the ESG Task Force, with clear delineation of responsibilities at all levels to ensure the systematic rollout and effective implementation of ESG management.

The Board is primarily responsible for reviewing and approving the Company's ESG development policies, strategies and objectives, supervising the implementation of ESG-related work, and reviewing and approving ESG reports and other significant ESG-related matters.

The main responsibilities of the ESG Office, as the coordinating function, include: (i) formulating overall policies, strategies, objectives and implementation approaches for ESG and climate change management; (ii) coordinating the setting, execution and performance evaluation of ESG and climate-related objectives; (iii) taking the charge in identifying and

technological innovation to enhance energy efficiency, the active adoption of clean technologies, and the deployment of renewable energy projects in actual operations and production. Going forward, we will continue to promote energy-saving and emission reduction projects and explore more renewable energy application solutions, so as to achieve synergies between the continuous improvement of environmental performance and business growth.

Environmental Protection

We attach great importance to environmental management. We have formulated strict management policies and control measures for the waste gas, waste water and solid waste regularly discharged during our production process. We strictly comply with the Environmental Protection Law, the Law of the PRC on the Prevention and Control of Environmental Pollution by Solid Wastes, the Law of the PRC on the Prevention and Control of Water Pollution, the Law of the PRC on the Prevention and Control of Air Pollution, the Law of the PRC on the Evaluation of Environmental Impacts, and other applicable environmental laws and regulations of China and other countries, so as to ensure that all operations are compliant with the laws and the requirements of the state's environmental policies.

We have established and implemented a standardised environmental management system in order to systematically identify and manage the environmental risks that we may face. We continue to promote the institutionalisation and standardisation of our environmental management in an effort to minimise the environmental impact of our daily operations. As at 31 December 2024, our six manufacturing bases located in Shenzhen, Nantong, Changzhou, Jiangsu, Hefei and Europe (namely, Shenzhen Senior, Nantong Senior, Changzhou Senior, Jiangsu Senior, Hefei Senior and European Senior, respectively) have all obtained the ISO 14001 environmental management system certification.

We actively respond to the EU Regulation (EC) No. 2023/1542 of the European Parliament and of the Council on Batteries and Waste Batteries, the EU Fluorine Restriction Directive and other international regulations, and continue to increase investment in R&D of green materials, and actively promote the technological break-through research of non-fluorine colloid products as an alternative to PVDF, so as to help our products better meet the market's green access standards. In the meantime, the Company has joined the Technical Committee of China Battery Industry Environmental Product Declaration Platform and the Battery Industry Carbon Emission Standard Working Group to help promote the construction of industry environmental standards and carbon emission accounting system, and to contribute to the green and low-carbon transformation of the battery industry.

As confirmed by our U.S. and Malaysian Legal Advisors and Swedish Legal Advisor as to the Environmental Matter during the Track Record Period and up to the Latest Practicable Date, we had materially complied with the environmental laws and regulations in respect of the construction of manufacturing bases in the foreign jurisdictions, including Sweden, Malaysia and the Unite States.

To address the gap of sustainable development standards in the separator industry, the Company has taken the lead in drafting and releasing a series of low-carbon standards for the industry, including the “Implementation Guide for Energy Efficiency Benchmarking in the Battery Industry”, “Evaluation Criteria for Sustainable Factories”, “Green Supply Chain Management Evaluation Specifications for Power Lithium Ion Battery Industry” and “Evaluation Requirements for Green Factories of Lithium Ion Battery Diaphragms”, to help the industry achieve sustainable development of the whole value chain. We hope to push the industry in the direction of lower carbon, higher efficiency and more recycling through the development of standards. In 2022, 2023 and 2024, we invested a total of approximately RMB48.16 million, RMB35.97 million and RMB39.6 million in environmental protection, respectively. For the nine months ended September 30, 2025, we invested a total of approximately RMB71.61 million in environmental protection. As at the Latest Practicable Date, we have not been subject to any administrative penalties, fines or sanctions for violation of any applicable environmental protection laws and regulations. During the Track Record Period, we complied with the relevant PRC environmental laws and regulations in all material respects.

The Group has established corresponding management policies and practices in relation to the use of energy-efficient equipment, application of recyclable polymers, reduction of solvent usage in slurry formulation, and the extension of battery separator life and recyclability, as follows: (i) Energy-Efficient Equipment: We have formulated energy management policies at multiple production sites, such as the Energy Management Manual (Shenzhen Senior), the Energy Procedure Document and Energy Resource Consumption Control Procedure (Nantong Senior), and the Equipment Power Consumption Management Standard (Changzhou Senior). These set out requirements for the procurement and use of high-efficiency equipment, encourage the adoption of energy-saving technologies and new equipment, and support the gradual phasing out of high-energy-consuming equipment. (ii) Application of Recyclable Polymers: Sustainability of materials is fully taken into account in our product development. For example, a dedicated module is included in the Feasibility Study Report (Europe Senior) to assess and determine the procurement and usage standards of recyclable polymers. In addition, the A-TD-QW08(10) Temperature and Humidity Management 297 Tc t-542.3(s)-42 sumitolratuuppl.3(er

Emissions and Waste Management

Water Management

We strictly comply with the Water Law of the PRC and other relevant laws and regulations, and formulate and implement a number of internal protocols, including the Water Conservation Management System, to continuously improve water resource management and water-saving awareness among employees. Each manufacturing base strives to improve water use efficiency and reduce water consumption through various measures, including digital management, water conservation campaigns, water equipment inspection and water balance testing. We have also set up a water conservation working group to monitor the use of water resources at each base in real time to ensure the effective implementation of water conservation work.

The following table sets forth our water consumption figures for the years indicated:

		For the year ended 31 December			As at September 30
	unit	2022	2023	2024	2025
Water consumption					
Total water consumption	cubic metre	804,157.20	878,185.82	2,264,356.13	1,566,910.96
Recycled water consumption	cubic metre	22,496.50	41,029.10	47,282.20	33,523.00
Water intensity	cubic metre/ revenue of RMB10,000	2.79	2.91	3.57	5.30

Note:

(1) The increase in the Group's water use intensity from 2022 to 2024 was primarily due to the commissioning and ramp-up of newly built and expanded production lines, which significantly raised water demand (including for production, steam, utilities, and domestic use). To reduce water consumption, the Group has implemented measures such as condensate and steam recovery, process optimization, wastewater treatment and reuse, and rainwater collection, thereby improving water recycling rates and overall water efficiency.

Energy Management

We attach great importance to energy management and energy efficiency improvement. We have established an energy management system and have energy inspection mechanisms in place to continuously promote the standardisation and optimization of energy use. We carry out regular energy audits to systematically assess the energy efficiency performance of key energy-consuming equipment and processes. We have built an intelligent energy management platform by combining digital and intelligent means to achieve real-time collection, data analysis and dynamic regulation of water, electricity, gas and other energy sources, and to identify energy wastage in a timely manner, in a bid to continuously optimise our energy use structures. We also implemented energy reform pilot projects to continuously upgrade our workshop energy systems, and have installed air energy heat pumps at the manufacturing bases to heat tap water using surplus heat in the basement for employees' daily use in the dormitories. In addition, we actively promote the application of

renewable energy by deploying photovoltaic power generation systems to give priority to

Greenhouse Gas Emissions ("GHG") Management

We systematically manage GHG emissions at the levels of operations, factory construction and production activities, assess the impact of business activities on the environment, and formulate the "Senior Greenhouse Gas Inventory Procedures for Materials" to continuously promote low-carbon transformation. We have set up a Greenhouse Gas Inventory Team, coordinated by the ESG Office, to carry out regular carbon emission verifications of our manufacturing bases, identify and account for sources of emissions across all process of operations in strict accordance with the ISO 14064–1 standard, and scientifically manage carbon emission data. In order to enhance the transparency and credibility of the data, the Company has commissioned a qualified third-party organisation to conduct independent audits to ensure that the data is true and accurate. We have also launched a Scope 3 GHG emissions accounting programme to identify nine categories of emission sources and measure their percentage share to provide data support for the development of scientific emission reduction approaches and the implementation of sustainable development goals. We have preliminarily completed the identification of applicable categories and data collection for Scope 3 greenhouse gas (GHG) emissions during the period from June 1, 2023 to May 31, 2024. The Group's key Scope 3 GHG emission categories include: purchased goods and services (approximately 57.65%), fuel- and energy-related activities not included in Scope 1 and Scope 2 (approximately 30.01%), and downstream transportation and distribution (approximately 8.19%). Going forward, we will continue to track and refine the identification of Scope 3 emission categories, while strengthening data collection and accounting management.

The following table sets forth our GHG emissions figures for the years indicated:

	Unit	For the year ended 31 December 2022	2023	2024	As at September 30 2025
GHG emissions					
Direct GHG emissions (scope 1)	tCO_2e	41,126.62	54,881.37	81,042.99	81,760.01
Indirect GHG emissions (scope 2)	tCO_2e	106,096.41	148,285.59	183,355.55	180,422.90
GHG emission intensity	tCO_2e/ revenue of RMB10,000	0.51	0.67	0.75	0.89

Notes:

(1) The sources of data for scope 1 GHGs are the consumption of gasoline, diesel fuel and natural gas during operations.

(2) The source of data for scope 2 GHGs is the consumption of purchased electricity and purchased heat during operations.

(3) The emission factors for gasoline, diesel, natural gas and purchased heat are calculated with reference to the "Guidelines for Accounting Methods and Reporting of Greenhouse Gas Emissions by Enterprises in Other Industries (for Trial Implementation)" issued by the General Office of the National Development and Reform Commission of China.

(4) The GHG emission factors for the power grid in mainland China refer to the Ministry of Ecology and Environment's Announcement on the Release of CO_2 Emission Factors for Electricity in 2022.

(5) The increase in the Group's GHG emission intensity from 2022 to 2024 was broadly consistent with the trend in energy consumption, primarily due to increased use of purchased electricity, natural gas, and diesel. To mitigate the increase, the Group has continued to optimise its energy mix and efficiency, promote the use of clean energy, and implement production process improvements and energy-saving measures to reduce emission intensity.

Addressing Climate Change

We recognise the risks and opportunities brought by climate change. Our senior management is responsible for overseeing the Company's direction on climate change and industry dynamics; considering climate-related risks and opportunities and integrating them into the our overall strategic decisions. The ESG Office is responsible for planning and executing climate change work and reporting to the senior management, and providing execution support and safeguard for base-related work. To meet the challenges of climate change, we continue to improve the climate resilience of our operations and businesses, assessing their potential impact on operational performance, while focusing on low-carbon technological innovation for our products, and are committed to enhancing our corporate climate resilience.

Risk identification

We identify physical risks, including extreme weather, as well as transformational risks, such as policy regulations, market preferences, and technological change:

- Physical risks: Extreme weather events (e.g., typhoons, heavy rains, droughts, etc.) may cause damage to our facilities such as industrial parks, office buildings and staff dormitories, which in turn may affect production schedules and the health of our employees. Long-term climate change such as rising temperatures and water scarcity may also pose challenges to our operations.

- Transformational risk: As environmental regulations become increasingly stringent, we need to continue to improve our level of compliance in the areas of energy use, waste management and information disclosure. At the same time, customers' increased green preference and the accelerated technological upgrading of the industry will place higher demands on our products, technologies and operating models.

Response measures

To enhance climate resilience, we have taken a number of comprehensive countermeasures: (i) establishing a climate emergency management system, conducting extreme weather risk assessments and emergency drills; (ii) promoting the construction of telecommuting mechanisms and emergency response facilities to enhance business

(v) introducing a digital energy consumption management platform to promote energy conservation and operational efficiency; and (vi) upgrading green products and services to expand the application scenarios of low-carbon solutions.

Metrics, Targets and Action Plans

To control energy consumption and greenhouse gas emissions from production and operations, we have established environmental targets. Taking 2024 as the baseline year, we aim to reduce both the greenhouse gas emission intensity (including Scope 1 and Scope 2 emissions, in tonnes of CO_2e per 10,000 RMB of revenue) and the energy consumption intensity (MWh per RMB10,000 of revenue) by 5% by 2029. To achieve these targets, the Group has advanced related initiatives and measures across multiple dimensions, including environmental compliance, renewable energy use, technological upgrades, product development, and resource recycling, as follows: (i) Environmental compliance in operations: The Company aligns its environmental management plans with domestic and international regulations. All production sites have obtained the necessary environmental permits, ensuring compliance with local enviro

Society

We are committed to fulfilling our corporate social responsibility. We highly value the establishment of long-term, mutual trust and mutually beneficial relationships with our employees, customers, suppliers and other stakeholders, and actively promote synergies between social and commercial values.

Employee Diversity and Equality

We strictly abide by the Labour Law of the PRC, the Labour Contract Law of the PRC, the Law of the PRC on the Protection of Minors, the Law of the PRC on the Protection of Rights and Interests of Women and other relevant laws and regulations. We have zero tolerance for child labour and forced labour, and oppose any form of harassment and bullying in the workplace, to effectively safeguard the lawful rights and interests of employees.

We are committed to creating a diverse, equal and inclusive working environment. We respect all types of background, experience and ability of employees, and value the diversity and innovative value of individual differences, and aim to provide all our employees with a sense of belonging and development opportunities in an inclusive environment. We

departments, and developed prevention and warning mechanisms, emergency response processes, post-disposal programmes and supervision and management requirements to comprehensively improve emergency response capabilities.

In terms of occupational health, we have formulated a system consisting of physical examinations as well as monitoring and protection measures, and also set up employee health monitoring files and injury accounts. Annual testing and status evaluation of occupational hazards is conducted. Employees in high-risk positions are provided with the necessary personal protective equipment. We are also optimising our operating environment. Regular multi-level safety training and drills are organised, and new employees are required to complete three levels of safety education before they are allowed to work, so as to comprehensively improve safety awareness and emergency response capabilities, and safeguard the health of employees and the safety of production and operation.

Employee Development and Training

We attach importance to the career development and growth of our employees, and have established clear career paths and fair promotion mechanisms to support the professional advancement of employees in different types of positions. Through the "360-degree staff review" system, we comprehensively assess the ability and quality of employees in managerial, technical and key positions, and form a talent review report to provide a basis for organisational structure optimization and key talent identification.

In terms of training, we build a hierarchical and categorised talent training system, set up the "Senior Special Training Camp", and carry out training courses covering the whole career cycle. The courses consist of different modules, such as pre-employment training, professional skills, comprehensive capabilities, academic education and title evaluation. We also set up five major types of training programmes catering to specific positions to ensure the systematic and effective nature of the training. Through the scientific training mechanism and a culture of continuing learning, we continue to refine the calibre of employees and strengthen the foundation for corporate development.

Product Quality

We drive quality upgrading with technological innovation, establish and improve product quality management system, including the Quality Manual, Product Surveillance and Measurement Control Procedures, Nonconforming Product Control Procedures, Product Recall Management Specification, and carry out regular audits of quality management system through Internal Audit Control Procedures to ensure the system continues to operate effectively. The Company has obtained ISO 9001:2015 quality management system certification, IATF 16949:2016 quality management system and other certifications, and conducts annual audits and updates of certification.

In order to strengthen product quality measurement and monitoring, we have formulated annual quality objectives and management programmes, covering production, quality, equipment, planning and other areas of work, and regularly track the progress, while conducting in-depth analysis and improvement of projects that do not meet the

standards, with the end goal of a standard rate of 100% for projects. We have also set up a performance assessment mechanism to incorporate core indicators, such as customer audit pass rate, number of customer complaints, and return rate into the management's assessment of performance indicators, to build an across-the-board quality management accountability system, and to promote the effective implementation of the quality objectives. With regards to after-sales service, we have established a standardised product recall process, defined the responsibilities of the marketing centres, quality control centres, and technical centres, and improved the closed-loop management of customer

developing a risk management culture and raising the risk management awareness of all employees. We have adopted and implemented comprehensive risk management policies in various aspects of our business operations.

Operational Risk Management

We are faced with operational risks relating to our daily operations, which primarily arise from inadequate or failed internal controls and systems, human errors, IT system failures or external events. We consider these operational risks to be the key risks in our business and believe that, with adequate operational policies and procedures, these inherent risks can be controlled and mitigated. We developed a robust risk management system monitoring and addressing risks in our daily operations.

To ensure the continuity of our business, we have put in place contingency plans for detecting and responding to emergency incidents. In the event of an emergency incident, our contingency plans set out prescribed response protocols applicable to our various business units. We continue to assess the effectiveness of our contingency plans, and would perform reviews after each emergency incident to identify potential areas for improvement. We also conduct regular emergency response drills to ensure our employees are familiar with our response protocols.

Regulatory Compliance Risk Management

We are subject to evolving regulatory requirements in the PRC, including requirements to obtain and renew certain licences, permits, approvals and certificates for our business operations in different regions. In order to manage our ongoing compliance with the laws and regulations applicable to our business effectively, we have implemented several internal control measures. In particular, we designated personnel to regularly monitor changes in laws, regulations and policies issued by the relevant government authorities in the regions in which we operate to ensure we obtain requisite licences to operate our business, and we have an up-to-date understanding of the applicable requirements. In addition, we monitor and review the status of our licences and permits on a regular basis. We continually improve our internal policies according to changes in laws, regulations and industry standards, and update our internal protocols accordingly.

Internal Control Risk Management

We have designed and adopted strict internal control procedures to ensure the compliance of our business operations with the relevant rules and regulations. In accordance with these procedures, our in-house legal department reviews and updates the forms of contracts that we enter into, examines the contract terms and reviews all relevant documents for our business operations, and is responsible for obtaining any requisite governmental pre-approvals or consents. We have strictly prohibited our employees from receiving kickbacks, bribing others, or secretly receiving commissions or any other personal benefits.

Human Resources Risk Management

We have implemented a human resource management system to ensure the effective functioning of us, safeguard the legitimate rights and interests of parties to the employment relationship and improve operating efficiency. Our internal human resource management system covers all the stages of employment relationship, from recruitment to probation, appraisal, promotion and review, and exit.

We have in place an employee handbook and a code of conduct approved by our management and have distributed them to all our employees. The handbook contains internal rules and guidelines regarding work ethics, fraud prevention mechanisms, negligence and corruption. We provide emp

Internal Audit

We have established an Audit Committee to monitor the implementation of our risk management policies across our Group on an ongoing basis and to ensure that our internal control system is effective in identifying, managing and mitigating risks involved in our business operations. The Audit Committee consists of three members, namely Dr. Lin Zhiwei, Mr. Tang Changjiang, and Mr. Zhu Bide. Dr. Lin Zhiwei is the chairman of the Audit Committee. For the professional qualifications and experiences of the members of our Audit Committee, please refer to "Directors and Senior Management" for details.

We also maintain an internal audit department which is responsible for reviewing the effectiveness of internal controls and reporting to the Audit Committee and senior management on any issues identified. Our internal audit department members are required to report to management to discuss any internal control issues we face and the corresponding measures to implement toward resolving such issues. The internal audit department reports to the Audit Committee to ensure that any major issues identified are channelled to the committee on a timely basis. The Audit Committee then discusses the issues and reports to the Board, if necessary.

RELATIONSHIP WITH OUR SINGLE LARGEST SHAREHOLDERS

OVERVIEW

As at the Latest Practicable Date, our Company is held as to approximately 12.67% and 0.03% by Prof. Chen and Ms. Chen, respectively. Therefore, Prof. Chen and Ms. Chen were in aggregate entitled to exercise the voting rights attached to approximately 12.69% of our Shares in issue.

Immediately following the completion of the [REDACTED], assuming the [REDACTED] is not exercised, Prof. Chen and Ms. Chen will be entitled to exercise in aggregate the voting rights attached to approximately [REDACTED]% of our Shares in issue. Assuming the [REDACTED] is exercised in full, Prof. Chen and Ms. Chen will be entitled to exercise in aggregate the voting rights attached to approximately [REDACTED]% of our Shares in issue. Accordingly, Prof. Chen and Ms. Chen will constitute the Single Largest Shareholders of our Company.

Please see "Directors and Senior Management" for biographical details of Prof. Chen. Please see "History, Reorganisation and Corporate Structure" for the simplified corporate structure of our Group.

RULE 8.10 OF THE LISTING RULES

As at the Latest Practicable Date, none of our Single Largest Shareholders had any interest in any business which competes, or is likely to compete, either directly or indirectly, with our business and would require disclosure under Rule 8.10 of the Listing Rules.

NON-COMPETE UNDERTAKINGS

Prof. Chen has entered into a non-compete undertaking in December 2014, pursuant to which Prof. Chen has undertaken, amongst others that, so long as he retains control of our Group:

(i) Prof. Chen shall not engage, directly or indirectly, in any business which is the same, similar to, or constitutes actual or potentially competitive business with our Company;

(ii) if, for any reason, any entities directly or indirectly held or controlled by Prof. Chen (other than our Company) (the "Restricted Entities") directly or indirectly engages in a business which competes or may compete with the business of our Company:

(a) our Company shall have the priority to engage in such business and the Restricted Entities shall not engage in such business. If requested by our Company, Prof. Chen shall transfer all his interests in the Restricted Entity, and undertake to grant to our Company a pre-emptive right on such interests, and shall use his best endeavours to procure such transaction is conducted on a fair and reasonable price and on the basis of normal commercial terms with independent third parties; or

(b) procure that the Restricted Entity promptly transfer or cease such business.

(iii) where Prof. Chen discovers any new business opportunity which competes or may compete directly or indirectly with the principal business of our Company, Prof. Chen shall promptly n or7(E)-Co-3 nitmp.4(all)n568.5(n)-6.17-568.2(sh)w3(r)-346(o).6

the delegated authorities of management team, as well as the regular updates of operational and financial data and information that are provided to our Directors;

(ii) each of our Directors is aware of his/her fiduciary duties as a director of our Company which requires, among other things, that he/she acts for the benefit and in the best interests of our Company and does not allow any conflict between his/her duties as a Director and his/her personal interest;

(iii) the Articles of Association has made relevant provisions to avoid conflict of interest, in that our Directors are prohibited from voting in any Board resolution approving any contract or arrangement or any other proposal in which he/she or any of his/her close associates has a material interest. Prof. Chen will abstain from

Operational Independence

Our Company will continue to operate independently from our Single Largest Shareholders after the [REDACTED]. Our Company has our own organisational structure with independent departments, each with specific areas of responsibility. Furthermore, we have independent production capabilities and technology relating to our Group's business and do not rely on our Single Largest Shareholders or any of their close associates. Our

CORPORATE GOVERNANCE MEASURES

Our Directors recognise the importance of sound corporate governance in protection of our Shareholders' interests. Our Company will comply with the provisions of the Corporate Governance Code in Appendix C1 to the Listing Rules, which sets out principles of good corporate governance.

In order to further avoid potential conflicts of interest, we have implemented the following measures to strengthen the protection of our Shareholders' interests:

(i) as part of our preparation for the [REDACTED], we have amended our Articles of Association to comply with the Listing Rules. In particular, our Articles of Association provide that, unless otherwise provided, a Director shall not vote on any resolution approving any contract or arrangement or any other proposal in which such Director or any of his/her close associates have a material interest;

(ii) where a Shareholders' meeting is to be held for considering proposed transactions in which our Single Largest Shareholders or any of its close associates has a material interest, our Single Largest Shareholders will abstain from voting on the relevant resolutions;

(iii) our Company has established internal control mechanisms to identify connected transactions. Upon [REDACTED], if our Company enters into connected transactions with our Single Largest Shareholders or any of its associates, our Company will comply with the applicable requirements under the Listing Rules;

(iv) we are committed that our Board shall include a balanced composition of executive Directors, non-executive Directors and independent non-executive Directors. We have currently appointed three independent non-executive Directors, and we believe our independent non-executive Directors: (a) possess sufficient experience; (b) are free of any business or other relationship which could interfere in any material manner with the exercise of their independent judgement; and (c) will be able to provide an impartial and external opinion to protect the interests of our Shareholders as a whole;

(v) our independent non-executive Directors will continuously review the compliance and enforcement of the undertakings by Prof. Chen under the non-compete undertakings;

(vi) in the event that our independent non-executive Directors are requested to review

(vii) we have appointed Goldlink Capital (Corporate Finance) Limited as our compliance advisor, which will provide advice and guidance to us in respect of compliance with the applicable laws in Hong Kong and the Hong Kong Listing Rules, including various requirements relating to directors' duties and corporate governance, upon [REDACTED].

CONNECTED TRANSACTIONS

Upon the [REDACTED], transactions between us and our connected persons will constitute our continuing connected transactions under Chapter 14A of the Listing Rules.

OUR CONNECTED PERSONS

We have entered into certain transactions in the ordinary and normal course of our business with the following connected persons, which will constitute connected transactions upon the [REDACTED]:

Name of our connected persons	Connected Relationship
Shenzhen Kexin Hydrogen Materials Co., Ltd. ( ) ("Shenzhen Kexin")	As at the Latest Practicable Date, Shenzhen Kexin is held as to 30% by Prof. Chen, who is an executive Director, a substantial shareholder and a Single Largest Shareholder of our Company. Therefore, Shenzhen Kexin will become a connected person of our Company upon [REDACTED].
Shenzhen Youte Fresh Filter Materials Technology Co., Ltd. ( ) ("Shenzhen Youte")	As at the Latest Practicable Date, Shenzhen Youte is held as to 60% by Mr. Chen Yifu ( ) ("Mr. Chen"), who is the son of Prof. Chen. Therefore, Shenzhen Youte will become a connected person of our Company upon [REDACTED].
Gotion High-tech, together with its subsidiaries ("Gotion Group")	Hefei Guoxuan High-tech Power Energy Co., Ltd. ( ) ("Hefei Guoxuan") is a substantial shareholder of our subsidiary, Hefei Senior, as it holds a 27.69% of equity interest in Hefei Senior. Based on publicly available information and to the best of our Directors' knowledge, information and belief, Hefei Guoxuan is a wholly owned subsidiary of Gotion High-tech and therefore members of Gotion Group will constitute connected persons of our Company at the subsidiary level upon completion of the [REDACTED].

CONNECTED TRANSACTIONS

FULLY-EXEMPT CONTINUING CONNECTED TRANSACTIONS

Services Framework Agreement

On [ ], our Company, for itself and on behalf of its subsidiaries, entered into a framework agreement (the "Services Framework Agreement") with Shenzhen Kexin, pursuant to which our Group will provide leasing services to Shenzhen Kexin, for a term commencing from the [REDACTED] Date to 31 December 2028. Members of our Group and Shenzhen Kexin will enter into individual agreements for each of the specific transactions contemplated thereunder, provided that any such individual agreement shall follow the principles as set out in the Services Framework Agreement and the aggregate fees to be received by our Group for the three financial years ending 31 December 2028 thereunder shall not exceed the proposed annual caps.

We will, from time to time, lease properties which are not in use by our Group to other parties, and such leases will be entered into on normal commercial terms in the ordinary and usual course of our business with third parties including Independent Third Parties and Shenzhen Kexin.

As the highest applicable percentage ratio of the transactions under the Services Framework Agreement for the three years ending 31 December 2028 calculated for the purpose of Chapter 14A of the Listing Rules is less than 0.1% on an annual basis, such transactions will, upon [REDACTED], constitute continuing connected transactions of our Company but will be fully exempt from all of the reporting, annual review, announcement, circular and independent Shareholders' approval requirements under Chapter 14A of the Listing Rules pursuant to Rule 14A.76(1) of the Listing Rules.

Receipt of labour services from Gotion Group and guarantee provided by Gotion Group

During the Track Record Period, Gotion Group provided certain labour services to Hefei Senior. The compensation to be paid by Hefei Senior for the receipt of such labour services shall be determined with reference to the compensation level of comparable positions in the same industry as Hefei Senior, and is expected to continue after [REDACTED].

As the highest applicable percentage ratio of the compensation paid to Gotion Group for such labour services for the three years ending 31 December 2028 calculated for the purpose of Chapter 14A of the Listing Rules is less than 0.1% on an annual basis, such transactions will, upon [REDACTED], constitute continuing connected transactions of our Company but will be fully exempt from all of the reporting, annual review, announcement, circular and independent Shareholders' approval requirements under Chapter 14A of the Listing Rules pursuant to Rule 14A.76(1) of the Listing Rules.

As at the Latest Practicable Date, Gotion Group provided guarantee in favour of Hefei Senior for certain bank borrowings amounting to RMB70.17 million. Such guarantee will constitute our continuing connected transaction under the Listing Rules.

On the basis that the guarantee, being financial assistance (as defined in the Listing Rules) provided by Gotion Group for our benefit, was conducted on normal commercial terms or better, and not secured by our assets, the transaction will be fully exempt from the reporting, annual review, announcement and independent Shareholders' approval requirements pursuant to Rule 14A.90 of the Listing Rules.

PARTIALLY-EXEMPT CONTINUI

We charge our customers on a cost-plus pricing basis, which is intended to cover our handling, logistics coordination, quality assurance and other administrative costs, taking into account the convenience and value-added services we provide. Such procurement will be entered into on normal commercial terms in the ordinary and usual course of our business with third parties including Independent Third parties and Shenzhen Youte. We are not and will not be bound to procure products from Shenzhen Youte, and we will only procure products from Shenzhen Youte if we consider it is in the interests of our Company and Shareholders as a whole.

Shenzhen Youte engages in the production and sales of purification products. During the Track Record Period, we have supplied products including lithium-ion battery separators to Shenzhen Youte and we expect that we will continue to provide such products after the [REDACTED]. Our Group has a stable business relationship with Shenzhen Youte. Shenzhen Youte is familiar with the products that our Group manufactured and procures these products for its production of purification products. Such collaboration with Shenzhen Youte brings our Group additional sales.

Consideration and Pricing Policies

The fees to be paid by our Group to Shenzhen Youte shall be determined through arm's length negotiations between the relevant parties and with reference to: (i) the type of products and transaction volume; (ii) the prevailing market price of products of similar nature, type and quantity; and (iii) the price offered by Independent Third Parties to us for similar products.

The fees to be charged by our Group to Shenzhen Youte shall be determined through arm's length negotiations between the relevant parties and with reference to: (i) the type of products and transaction volume; (ii) the prevailing market price of products of similar nature and quantity; (iii) expected expenses and cost and profit margin of our Group; and (iv) the price offered by the relevant member of our Group to Independent Third Parties for the similar products.

Historical Amounts

During the Track Record Period, we did not procure any products from Shenzhen Youte.

We have only supplied products to Shenzhen Youte since December 2024. The historical transaction amounts received by our Group from Shenzhen Youte for the year ended 31 December 2024 and the nine months ended 30 September 2025 was RMB5,735 and RMB231,628, respectively.

Annual Caps

The following table sets forth the proposed annual caps for the annual transaction amounts to be paid/received by our Group to/from Shenzhen Youte under the Products Sales Framework Agreement:

	For the year ending 31 December		
	2026	2027	2028
	(RMB in million)		
Transaction amount to be paid by our			

NON-EXEMPT CONTINUING CO NNECTED TRANSACTIONS

Products Sales Framework Agreement

Principal Terms

On [ ], our Company, for itself and on behalf of its subsidiaries, entered into a framework agreement (the "Products Sales Framework Agreement") with Gotion Group, pursuant to which our Group will sell certain products (including but not limited to

Historical Amounts

The historical transaction amounts of sales by our Group to Gotion Group for the years ended 31 December 2022, 2023, 2024 and nine months ended 30 September 2025 were RMB233.5 million, RMB223.0 million, RMB304.0 million and RMB259.3 million, respectively.

Annual Caps

The following table sets forth the proposed annual caps for the amounts to be received by our Group:

	For the year ending 31 December		
	2026	2027	2028
	(RMB in million)		
Transaction amount to be received by our Group from Gotion Group	638.0	759.0	800.0

The proposed annual caps are determined based on:

(i) the historical amounts of the transactions contemplated under the relevant transactions between our Group and Gotion Group during the Track Record Period;

(ii) the existing transactions entered into between the relevant members of our Group and Gotion Group and the expected increase in demand of Gotion Group for such products due to Gotion Group's expanded production capacity and our plan for business expansion and increasing market opportunities; and

(iii) other factors including but not limited to the expected market price of such products and services and their expected market trend.

Listing Rules Implications

As the highest applicable percentage ratio of the transactions with Gotion Group for the three years ending 31 December 2028 calculated for the purpose of Chapter 14A of the Listing Rules will be more than 5% on an annual basis, such transactions will, upon [REDACTED], constitute continuing connected transactions of our Company and subject to the reporting, annual review, announcement and independent Shareholders' approval requirements under Chapter 14A of the Listing Rules. In accordance with Rules 14A.55 and 14A.56, the independent non-executive Directors and the Company's auditors will review the continuing connected transactions annually, and their confirmations will be disclosed in the Company's annual report.

INTERNAL CONTROL PROCEDURES

Our Group adopts the following internal control measures to ensure that the continuing connected transactions will becarried out in accordance with the terms of relevant agreements, including the pricingpolicies, and in compliance with all the applicable requirements under the Listing Rules:

- we have adopted a connected transactions management policy for the purpose of ensuring that relevant connected transactions will be conducted in a fair manner, on normal commercial terms and in the interests of our Company and our Shareholders as a whole;

- prior to the execution of the individual agreements under any framework agreements, the operation department of the relevant business sector of our Group will compare the terms of the proposed transactions (including pricing and other contractual terms) with those similar transactions entered with Independent Third Parties or the terms offered to or by Independent Third Parties (as the case may be) to ensure that the terms of agreements thereunder shall be no less favourable to our Group than terms between our Group and the Independent Third Parties;

- the finance team of our Group shall regularly examine the pricing of the transactions under the relevant agreements to ensure that those transactions are conducted in accordance with the pricing terms therein;

- the internal control team of our Group shall periodically review the pricing of the transactions under the relevant agreements against the prices negotiated between our Group and Independent Third Parties for similar products and services, to ensure that the terms of the agreements thereunder are not less favourable to our Group than terms between our Group and the Independent Third Parties;

- the finance and business teams of our Group shall periodically monitor the transaction amount under relevant agreements, when it is expected that the transaction amount might exceed the annual cap, promptly report in accordance

WAIVER FROM THE STOCK EXCHANGE

As the material terms of the partially-exempt and non-exempt connected transactions are disclosed in this document and potential investors will participate in the [REDACTED] on the basis of the disclosures, our Directors consider that strict compliance with the announcement, circular and/or independent Shareholders' approval requirements under Chapter 14A of the Hong Kong Listing Rules would be unduly burdensome and, in

SOLE SPONSOR'S CONFIRMATION

The Sole Sponsor has (i) reviewed the relevant documents and information provided by the Company in connection with the aforesaid Products Framework Agreement and the Products Sales Framework Agreement; and (ii) engaged in due diligence review and discussions with the management of the Company. On the basis of the foregoing, the Sole Sponsor is of the view that each of the aforementioned Products Framework Agreement and the Products Sales Framework Agreement (in respect of which waivers are sought) has been entered into in the ordinary and usual course of business on normal commercial terms or better, the terms and proposed annual cap of which are fair and reasonable and in the interests of the Company and its Shareholders as a whole.

DIRECTORS

Our Board consist of the following Directors. Our Directors serve a term of three years and shall be subject to re-election upon the expiry of their respective term of office.

Name	Age	Position(s)	Date of joining our Group	Date of appointment as Director[1]	Roles and responsibilities
Chen Xiufeng ( )	58	Executive Director, chairman of our Board and general manager	September 2003	September 2008	Responsible for the strategic planning, business direction and daily operation and management of our Group
ZHANG XIAOMIN	57	Executive Director, vice general manager and chief technology officer	January 2017	December 2023	Responsible for the overall management, daily operation, and technologies of our Group
Xu Liqiang ( )	47	Executive Director	May 2021	June 2025	Responsible for the overall management and daily operation of our east China base
Zhu Bide ( )	69	Non-executive Director	November 2021	November 2021	Responsible for providing professional opinion and judgement

Notes:

(1) The dates of the appointment refer to the appointment of the relevant positions in our Company after its conversion into a joint stock company with limited liability in September 2008. For the details of the conversion, please see "History and Corporate Structure — Incorporation of our Company and Conversion into a Joint Stock Company"

(2) Mr. Leung Shu Sun Sunny shall replace one of the c

Mr. Xu Liqiang ( ), aged 47, is an executive Director of our Company. Mr. Xu is primarily responsible for the overall management and daily operation of our east China base.

Mr. Xu has been a Director since June 2025. He served as the deputy general manager of Jiangsu Senior from May 2021 to March 2022, the general manager of Nantong Senior from July 2022 to June 2024. Mr. Xu has been serving as the general manager of the east China base of our Company since June 2024. Prior to joining our group, Mr. Xu served as multiple roles at Murata Energy Device Wuxi Co., Ltd. ( ) from

Mr. Tang has been serving as the independent director of Tianjin Guoan Mengguli New Materials Technology Co., Ltd. ( ) since January 2024 and Taihe New Materials Group Co., Ltd. ( ) since April 2023. He currently serves as the secretary-general of Guangdong Battery Industry Association ( ).

From August 1994 to October 1996, Mr. Tang served as general manager at Shenzhen Collins Electronics Industrial Co., Ltd. ( ). From March 1998 to May 2002, Mr. Tang served as the deputy secretary-general at Shenzhen Electronics Industry Association ( ). From March 2003 to June 2013, he served as the general manager of Shenzhen Tangshi Electronics Co., Ltd. ( ). From July 2013 to May 2019, he served as the vice general manager at Shenzhen Xinyuhuan Testing Co., Ltd. ( ). From June 2020 to March 2023, he served as the independent director at Yunnan Enjie New Materials Co., Ltd. ( ), a company listed on the Shenzhen Stock Exchange under the stock code 002812.

Mr. Tang obtained his master's degree in Victoria University in Australia in November 2014.

Dr. Lin Zhiwei ( )

Ms. Sun obtained her bachelor's degree in chemical engineering and technology from Wuhan University of Technology ( ) in June 2008, her master's degree in materials processing from Chongqing University of Technology ( ) in June 2011. Ms. Sun was accredited as the senior engineer in polymer chemistry by Shenzhen Municipal Human Resources and Social Security Bureau ( ).

Mr. Leung Shu Sun Sunny ( ), aged 62, was appointed as our independent non-executive Director on June 2025 with effect from [REDACTED]. Mr. Leung is primarily responsible for providing independent advice and judgement to the Board.

Mr. Leung has been serving as a director of Universal Link Consultants Limited ( ) since July 2001, an independent non-executive director at Pan Asia Environmental Protection Group Limited, a company listed on the Main Board of the Stock Exchange under the stock code 00556, since December 2007, an independent non-executive director at China Art Financial Holdings Limited ( ), a company listed on the Main Board of the Stock Exchange under the stock code 01572, since October 2016 and a director of Gold Fountain (China) Trading Limited ( ) since February 2021. He served as the company secretary of Xiwang Sugar Holdings Company Limited (now known as Xiwang Property Holdings Limited), a company listed on the Main Board of the Stock Exchange under the stock code 02088, from 2005 to June 2007.

Prior to these roles, Mr. Leung worked at PricewaterhouseCoopers (formerly known as Coopers & Lybrand) from 1988 to 1990 and last served as senior auditor. He served as the financial controller of a Bel Trade (Holdings) Company Ltd. ( ) from October 1993 to June 1998.

Mr. Leung obtained his professional diploma in accounting from Hong Kong Polytechnic University (formerly known as Hong Kong Polytechnic) in Hong Kong in November 1987, his master's degree in business administration from the University of South Australia in Australia in December 1997.

Save as disclosed above, (i) none of our Directors (other than our independent non-executive Directors) has any interests in any business, which competes or is likely to compete, either directly or indirectly, with our business, and (ii) to the best knowledge, information and belief of the Directors having made all reasonable inquiries, there were no other matters with respect to the appointment of the Directors that need to be brought to the attention of the Shareholders and there was no information relating to our Directors that is required to be disclosed pursuant to Rules 13.51(2)(b) to (v) of the Listing Rules.

Rule 3.13 of the Listing Rules

Each of the independent non-executive Directors has confirmed (i) his/her independence as regards each of the factors referred to in Rules 3.13(1) to (8) of the Listing Rules, (ii) he/she has no past or present financial or other interest in the business of the Company or its subsidiaries or any connection with any core connected person of our Company under the Listing Rules as at the Latest Practicable Date, and (iii) that there are no other factors that may affect his/her independence at the time of his/her appointments.

SENIOR MANAGEMENT

The senior management is responsible for the day-to-day management of our business. None of the members of senior management are related to our Directors or other members of senior management. The following table sets out the information of members of our senior management.

Name	Age	Position(s)	Date of joining our Group	Date of appointment as Director/ senior management[1]	Roles and responsibilities
Chen Xiufeng ( )	58	Executive Director, chairman of our Board and general manager			

Note:

(1) The dates of the appointment refer to the appointment of the relevant positions in our Company after its conversion into a joint stock company with limited liability in September 2008. For the details of the conversion, please see "History and Corporate Structure — Incorporation of our Company and Conversion into a Joint Stock Company".

Prof. Chen Xiufeng ( ), aged 58, is an executive Director, chairman of the Board and general manager of our Company. For Prof. Chen's biography, please see "— Directors — Executive Directors" in this section.

Dr. ZHANG XIAOMIN , aged 58, is an executive Director, vice general manager and chief technology officer of our Company. For Dr. Zhang's biography, please see "— Directors — Executive Directors" in this section.

Mr. Xia Jun ( ), aged 45, has been our vice president of marketing since February 2023 and our vice general manager since January 2024. He is responsible for daily operation of our Group.

Prior to joining our Group, Mr. Xia served as marketing & sales senior manager at Daikin Chemical International Trading (Shanghai) Co., Ltd. ( ) from March 2003 to October 2006 and Daikin Fluorochemicals (China) Co., Ltd. from October 2006 to September 2014. He served as Northeast Asia Sales Director at SI Group-Shanghai Co., Ltd. ( ) from September 2014 to January 2018. He served as Greater China materials sales director at Solvay (Shanghai) Co., Ltd. ( ) from January 2018 to March 2023.

Mr. Wang obtained his bachelor's degree in accounting from Harbin Institute of Technology ( ) in July 2005.

Mr. Li Sheng ( ), aged 40, has been our board secretary since September 2024 and joint company secretary since June 2025. He is responsible for information disclosure and investor relations management of our Group.

Prior to joining our Group, Mr. Li served as multiple titles at Industrial Securities Co., Ltd. ( ), a company listed on the Shanghai Stock Exchange under the stock code 601377, from 2011 to 2021, including sales manager of institutional client department, sales manager of financial and economic research institute, head of Guangzhou business of sales trading headquarters. He served as the head of South China group of institutional client headquarters at Shenwan Hongyuan Securities Co., Ltd. ( ) from September 2021 to September 2024.

Mr. Li obtained his bachelor's degree in environmental engineering from Nanjing University in PRC in June 2006 and his master's degree in finance from Sun Yat-sen University ( ) in PRC in June 2010.

FURTHER INFORMATION ABOUT PROF. CHEN

During his tenure with our Group, Prof. Chen, our executive Director, chairman of the Board and a Single Largest Shareholder, received certain regulatory and warning decisions (the "Decisions") from the Shenzhen Stock Exchange and the CSRC (collectively, the "Incidents"), listed as follows:

(i) Delayed notification of share pledge by Prof. Chen (March 2018) Prof. Chen pledged 17.7 million shares (about 9.22% of the Company's total share capital) on 6 March 2018, but only notified the Company of this pledge on 23 March 2018. This delay was due to his inadvertent oversight of the relevant reporting requirements. The Shenzhen Stock Exchange required Prof. Chen to be more attentive, correct the breach, and prevent recurrence.

(ii) Unreported related party transaction due to unnotified directorship (November 2018) Mr. Wu Feng, then an independent non-executive director of the Company, was appointed as an independent non-executive director of Tianjin Lishen Battery Co., Ltd. ( ), ("Tianjin Lishen") (a customer), making Tianjin Lishen a related party from December 2017. Wu Feng did not notify the Board, and the Board only approved and disclosed the related party transaction after business of RMB29.2 million had already occurred in October 2025 and Mr. Wu Feng resigned in the same month due to personal matters. The Board (including Prof. Chen) was required to address the oversight and prevent similar issues.

(iii) Delayed shareholding change disclosure by controlling shareholders (December 2020/January 2021) Prof. Chen and another controlling shareholder reduced their collective Company stake from about 26.49% to 20.81% (a decrease exceeding the 5% disclosure threshold) between August 2019 and November 2020, but delayed

disclosing this change and the related share sales until 27 November 2020. The delay occurred partly because Prof. Chen was unaware of the other shareholder's reduction. The Shenzhen CSRC and the Shenzhen Stock Exchange issued a warning, requiring better compliance going forward.

(iv) Failure to properly record insider information access (July 2020 – August 2021, 3 in total): the Company signed a significant sales contract but failed to accurately record all persons with access to insider information due to staff errors. The Shenzhen CSRC issued a warning letter to the Company, Prof. Chen (as Chairman), and the then Board secretary, instructing them to improve internal controls and prevent similar lapses.

Despite these incidents involving Prof. Chen, after conducting a comprehensive assessment (including understanding the nature of the Incident), the Company is of the view that the Decisions did not adversely affect Prof. Chen's suitability to act as an executive Director and chairman of the Board, and Prof. Chen possesses the experience, knowledge, and skills required to serve as a director of a listed company under Listing Rules 3.08 and 3.09, and the Decisions do not have any material adverse effect on the Company's suitability for listing on the Stock Exchange, for the following reason:

(i) according to the PRC Company Law and the rules of the Shenzhen Stock Exchange, the Decisions did not prohibit Prof. Chen from acting as a director or a

relationships, and implementing procedures to identify and record persons with access to inside information. The Company has established a comprehensive information disclosure management systems, including the following:

a. the “Information Disclosure Management Policy”, which stipulates that when shares held by a company shareholder exceeding 5% are pledged, frozen, judicially auctioned, entrusted, placed in trust, or subject to legally restricted voting rights, such shareholder or the actual controller shall immediately notify the company and cooperate in fulfilling information disclosure obligations;

b. the “Connected Transaction Management Policy” to clearly define the scope of connected persons (including connected natural persons, connected legal persons, and potential connected persons). These systems require directors and senior management to promptly declare their connected relationships, strictly regulate the decision-making procedures for connected transactions and the information disclosure process; and

c. the “Insider Information Registration Policy”, which clearly defines the scope of inside information and persons with access to such information. Pursuant such policy, the Company has established procedures for inside

relevant regulatory authorities have not issued any subsequent warnings, sanctions or enforcement actions in relation to the Incidents, and the matters are therefore considered closed.

In light of the above reasons, the Directors are of the view that the Incidents revealed in the Decisions were immaterial and Prof. Chen is suitable to serve as a director of a listed company under Rules 3.08 and 3.09 of the Listing Rules. Based on the independent due

by Directors and their close associates. The Company has established a comprehensive information disclosure management systems, including the following:

The “Insider Information Registration Policy”, which clearly defines the scope of inside information and persons with access to such information. Pursuant such

JOINT COMPANY SECRETARIES

Mr. Li Sheng ( ), aged 40, was appointed as one of our joint company secretaries in June 2025 with effect from the [REDACTED]. For Mr. Li's biography, please see "— Senior Management" of this section.

Ms. Jian Xuegen ( ), aged 39, was appointed as one of our joint company secretaries in June 2025 with effect from the [REDACTED]. Ms. Jian is an assistant vice president of SWCS Corporate Services Group (Hong Kong) Limited.

Ms. Jian obtained her bachelor's degree in accounting from South China University of Technology ( ) in PRC in July 2008. She is a member of the Hong Kong Institute of Certified Public Accountants. She is also a member of the Chinese Institute of Certified Public Accountants.

MANAGEMENT AND CORPORATE GOVERNANCE

Board Committees

Our Board delegates certain responsibilities to various committees. We have established four Board committees, namely the Audit Committee, the Remuneration and Appraisal Committee, the Nomination Committee and the Strategy and Development Management Committee.

Audit Committee

We have established the Audit Committee with written terms of reference in compliance with Rule 3.21 of the Listing Rules and the Corporate Governance Code set out in Appendix C1 to the Listing Rules. The primary duties of the Audit Committee are to review and supervise the financial reporting process and internal controls system of our Group, review connected transactions, and provide advice and comments to the Board. The Audit Committee comprises three members, namely Dr. Lin Zhiwei, Mr. Tang Changjiang, and Mr. Zhu Bide, with Dr. Lin Zhiwei (being an independent non-executive Director with the appropriate professional qualifications as required under Rules 3.10(2) and 3.21 of the Listing Rules) as chairperson of the Audit Committee.

Remuneration and Appraisal Committee

We have established the Remuneration and Appraisal Committee with written terms of reference in compliance with Rule 3.25 of the Listing Rules and the Corporate Governance Code set out in Appendix C1 to the Listing Rules. The primary duties of the Remuneration and Appraisal Committee are to review and make recommendations to the Board on the terms of remuneration packages, bonuses, and other compensation payable to our Directors and other senior management. The Remuneration and Appraisal Committee comprises three members, namely Mr. Tang Changjiang, Dr. Lin Zhiwei, and Mr. Xu Liqiang, with Mr. Tang Changjiang as chairperson of the Remuneration and Appraisal Committee.

Nomination Committee

Board diversity

Our Company [has] adopted a board diversity policy (the "Board Diversity Policy") which sets out the approach to achieve diversity of the Board. Our Company recognises and embraces the benefits of having a diverse Board and sees increasing diversity at the Board level, including gender diversity, as an essential element in maintaining our Company's competitive advantage and enhancing its ability to attract, retain and motivate employees from the widest possible pool of available talent. Pursuant to the Board Diversity Policy, in reviewing and assessing suitable candidates to serve as a Director of our Group, the Nomination Committee will consider a number of aspects, including but not limited to gender, age, cultural and educational background, professional qualifications, skills, knowledge, and industry and regional experience. Pursuant to the Board Diversity Policy, the Nomination Committee will discuss periodically and when necessary, agree on the measurable objectives for achieving diversity, including gender diversity, on the Board and recommend them to the Board for adoption.

Our Directors have a balanced mixed of knowledge and skills, including but not limited to overall business management, engineering, and finance and accounting. They received degrees in various majors including electronic technology, materials, business administrationes, dia2.2(8c)-escoans4n

Management presence

Pursuant to Rules 8.12 and 19A.15 of the Listing Rules, an issuer must have a

COMPLIANCE ADVISOR

We have appointed Goldlink Capital (Corporate Finance) Limited as our compliance advisor (the "Compliance Advisor") pursuant to Rule 3A.19 of the Listing Rules. The Compliance Advisor will provide us with guidance and advice as to compliance with the requirements under the Listing Rules and applicable laws. Pursuant to Rule 3A.23 of the Listing Rules, the Compliance Advisor will advise our Company, among others, in the following circumstances:

- before the publication of any regulatory announcement, circular, or financial report;
- where a transaction, which might be a notifiable or connected transaction, is contemplated, including share issues and share repurchases;
- where we propose to use the [REDACTED] of the [REDACTED] in a manner different from that detailed in this document or where the business activities, development, or results of our Group deviate from any forecast, estimate, or other information in this document; and
- where the Stock Exchange makes an inquiry to our Company regarding unusual movements in the price or [REDACTED] of our listed securities or any other matters in accordance with Rule 13.10 of the Listing Rules.

The term of appointment of the Compliance Advisor shall commence on the [REDACTED] Date and is expected to end on the date on which we comply with Rule

SUBSTANTIAL SHAREHOLDERS

SUBSTANTIAL SHAREHOLDERS

So far as our Directors are aware, immediately following completion of the [REDACTED] (assuming the [REDACTED] is no t exercised), the following persons will have an interest or short position in our Shares or underlying Shares which would fall to be disclosed to us under the provisions of Divisions 2 and 3 of Part XV of the SFO, or, will be, directly or indirectly, interested in 10% or more of the issued voting shares of any class of shares of our Company or any other member of our Group:

Substantial shareholders of our Company

		A Shares held as at the Latest Practicable Date		Shares held immediately following the completion of the [REDACTED][1)(2)]		
Name of Shareholder	Capacity/Nature of interest	Number	Approximate percentage of issued Shares (%)	Number	Approximate percentage of issued A Shares (%)	Approximate percentage of total issued Shares (%)
Prof. Chen[(3)]	Beneficial owner	170,489,491	12.67	170,489,491 A Shares	12.67	[REDACTED]
	Interest of spouse	346,700	0.03	346,700 A Shares	0.03	[REDACTED]
Ms. Chen[(3)]	Beneficial owner	346,700	0.03	346,700 A Shares	0.03	[REDACTED]
	Interest of spouse	170,489,491	12.67	170,489,491 A Shares	12.67	[REDACTED]

Notes:

(1) All interest stated are long positions.

(2) The table above assumes (i) the [REDACTED] becomes unconditional and the [REDACTED] are issued pursuant to the [REDACTED] and (ii) the [REDACTED] is not exercised.

(3) Ms. Chen is the spouse of Prof. Chen. As such, by virtue of the SFO, each of Prof. Chen and Ms. Chen is deemed to be interested in the Shares held by the other.

Except as disclosed above, our Directors are not aware of any other person who will, immediately following completion of the [REDACTED] (assuming the [REDACTED] is not exercised), have an interest or short position in our Shares or underlying Shares which would fall to be disclosed to us under the provisions of Divisions 2 and 3 of Part XV of the SFO, or, will be, directly or indirectly, interested in 10% or more of the issued voting shares of any class of shares of our Company or any other member of our Group.

SHARE CAPITAL

This section presents certain information regarding our share capital before and upon completion of the [REDACTED].

BEFORE THE [REDACTED]

As at the Latest Practicable Date, our share capital was RMB1,345,710,639, comprising 1,345,710,639 A Shares with a nominal value of RMB1.00 each.

UPON COMPLETION OF THE [REDACTED]

Immediately following completion of the [REDACTED] (assuming that the [REDACTED] is not exercised), the share capital of our Company immediately following completion of the [REDACTED] will be as follows:

Description of Shares	Number of Shares	Approximate percentage to total share capital (%)
A Shares in issue	1,345,710,639	[REDACTED]
H Shares to be issued under the [REDACTED]	[REDACTED]	[REDACTED]
Total	[REDACTED]	100.00

Immediately following completion of the [REDACTED] (assuming the [REDACTED] is fully exercised) the share capital of our Company immediately following completion of the [REDACTED] will be as follows:

Description of Shares	Number of Shares	Approximate percentage to total share capital (%)
A Shares in issue	1,345,710,639	[REDACTED]
H Shares to be issued under the [REDACTED]	[REDACTED]	[REDACTED]
Total	[REDACTED]	100.00

SHARE CAPITAL

RANKING

Upon the completion of the [REDACTED], our Shares will consist of A Shares and H Shares. A Shares and H Shares are all ordinary Shares in the share capital of our Company and are regarded as the same class of Shares under the Articles of Association.

Apart from certain qualified domestic institutional investors in the PRC, the qualified PRC investors under the Shanghai-Hong Kong Stock Connect or the Shenzhen-Hong Kong Stock Connect and other persons who are entitled to hold our H Shares pursuant to relevant PRC laws and regulations or upon approvals of any competent authorities, H Shares generally cannot be [REDACTED] for by or [REDACTED] between legal or natural persons of the PRC.

A Shares and H Shares shall carry the same rights in all other respects and, in particular, will rank equally for dividends or distributions declared, paid or made. All dividends in respect of our H Shares are to be paid by us in Hong Kong dollars whereas all dividends in respect of our A Shares are to be paid by us in Renminbi. In addition to cash, dividends may also be distributed in the form of Shares. Holders of our H Shares will receive share dividends in the form of H Shares, and holders of our A Shares will receive share dividends in the form of A Shares.

NO CONVERSION OF OUR A SHARES INT O H SHARES FOR [REDACTED] AND [REDACTED] ON THE HONG KONG STOCK EXCHANGE

Our A Shares and our H Shares are generally neither interchangeable nor fungible, and the market prices of our A Shares and our H Shares may be different after the [REDACTED]. The Guidelines on Applicatio n for "Full Circulation" of Domestic Unlisted Shares of H-share Companies (H
announced by the CSRC are not applicable to companies dual listed in the PRC and on the Hong Kong Stock Exchange. As at the Latest Practicable Date, there were no relevant rules or guidelines from the CSRC providing that A Shareholders may convert A shares held by them into H shares for [REDACTED] and [REDACTED] on the Hong Kong Stock Exchange.

APPROVAL FROM HOLDERS OF A SHAR ES REGARDING THE [REDACTED]

Approval from holders of A Shares is required for our Company to issue H Shares and seek the listing of H Shares on the Hong Kong Stock Exchange. Such approval was obtained by us at the shareholders' general meeting of our Company held on 21 May 2025 and is subject to the following major conditions:

(i) Size of the [REDACTED]: The proposed number of H Shares to be [REDACTED] shall not exceed approximately [REDACTED]% of the total issued share capital enlarged by the H Shares to be issued pursuant to the [REDACTED] (before the exercise of the [REDACTED]). The number of H Shares to be issued pursuant to the full exercise of the [REDACTED] shall not exceed [REDACTED]% of the total number of H Shares to be [REDACTED] initially under the [REDACTED].

(ii) Method of [REDACTED]: The method of [REDACTED] shall be by way of an [REDACTED] to institutional investors and a [REDACTED] for subscription in Hong Kong.

(iii) Target investors: The H Shares shall be issued to overseas institutional investors, corporations and individual investors, as well as qualified domestic institutional investors and other investors who fulfil the relevant laws and regulations.

(iv) Price determination basis: The [REDACTED] of the H Shares will be determined by the Board and its authorised person with the authorization of the Shareholders' general meetings, together with the [REDACTED], after full consideration of the interests of existing Shareholders, investors of our Company and the conditions of domestic and international capital markets conditions with reference to the international practices, the general valuation level of the industry in which our Company operates, and through demands for orders and book-building process.

(v) Valid period: The issue and [REDACTED] of H Shares on the Hong Kong Stock Exchange shall be completed within 24 months from the date on which such matters were approved at the Shareholders' meeting. If the Company obtains approval from the relevant regulatory authorities for the [REDACTED] within the 24 months, the authorization period shall automatically be extended to the later of the completion date of this issuance and the [REDACTED] or the exercise date of the [REDACTED] (if applicable). There are no other approved [REDACTED] plans for our Shares except the [REDACTED].

CIRCUMSTANCES UNDER WHICH GENERAL MEETING AND MEETING ARE REQUIRED

For details of circumstances under which our Shareholders' general meeting is required, please see "Summary of Articles of Association of the Company" in Appendix III to this document.

SHARES INCENTIVE PLANS

Certain directors and employees of our Company and our subsidiaries are eligible for interests of our Shares through the incentive plans of our Company. For details, please see "Appendix IV — Statutory and General Information — (D) Share Incentive Plans" in this document.

SHARE CAPITAL

RANKING

Upon the completion of the [REDACTED], our Shares will consist of A Shares and H Shares. A Shares and H Shares are all ordinary Shares in the share capital of our Company and are regarded as the same class of Shares under the Articles of Association.

Apart from certain qualified domestic institutional investors in the PRC, the qualified PRC investors under the Shanghai-Hong Kong Stock Connect or the Shenzhen-Hong Kong Stock Connect and other persons who are entitled to hold our H Shares pursuant to relevant PRC laws and regulations or upon approvals of any competent authorities, H Shares generally cannot be [REDACTED] for by or [REDACTED] between legal or natural persons of the PRC.

A Shares and H Shares shall carry the same rights in all other respects and, in particular, will rank equally for dividends or distributions declared, paid or made. All dividends in respect of our H Shares are to be paid by us in Hong Kong dollars whereas all dividends in respect of our A Shares are to be paid by us in Renminbi. In addition to cash, dividends may also be distributed in the form of Shares. Holders of our H Shares will receive share dividends in the form of H Shares, and holders of our A Shares will receive share dividends in the form of A Shares.

NO CONVERSION OF OUR A SHARES INT O H SHARES FOR [REDACTED] AND [REDACTED] ON THE HONG KONG STOCK EXCHANGE

Our A Shares and our H Shares are generally neither interchangeable nor fungible, and the market prices of our A Shares and our H Shares may be different after the [REDACTED]. The Guidelines on Applicatio n for "Full Circulation" of Domestic Unlisted Shares of H-share Companies (H
announced by the CSRC are not applicable to companies dual listed in the PRC and on the Hong Kong Stock Exchange. As at the Latest Practicable Date, there were no relevant rules or guidelines from the CSRC providing that A Shareholders may convert A shares held by them into H shares for [REDACTED] and [REDACTED] on the Hong Kong Stock Exchange.

APPROVAL FROM HOLDERS OF A SHAR ES REGARDING THE [REDACTED]

Approval from holders of A Shares is required for our Company to issue H Shares and seek the listing of H Shares on the Hong Kong Stock Exchange. Such approval was obtained by us at the shareholders' general meeting of our Company held on 21 May 2025 and is subject to the following major conditions:

(i) Size of the [REDACTED]: The proposed number of H Shares to be [REDACTED] shall not exceed approximately [REDACTED]% of the total issued share capital enlarged by the H Shares to be issued pursuant to the [REDACTED] (before the exercise of the [REDACTED]). The number of H Shares to be issued pursuant to the full exercise of the [REDACTED] shall not exceed [REDACTED]% of the total number of H Shares to be [REDACTED] initially under the [REDACTED].

[REDACTED] expenses we expect to incur would consist of (i) approximately HK$[REDACTED] [REDACTED] related expe nses and fees (including [REDACTED], SFC transaction levy, Stock Exchange trading fee and AFRC transaction levy), and (ii) approximately HK$[REDACTED] non-[REDACTED]-related expenses and fees (including (a) fees and expenses of legal advisors and accountants of approximately HK$[REDACTED] and (b) other fees and expenses of HK$[REDACTED]).

The [REDACTED] expenses above are the latest practicable estimate for reference only, and the actual amount may differ from this estimate.

DISCLOSURE REQUIRED UNDER THE LISTING RULES

The Directors have confirmed that as at the Latest Practicable Date, they were not aware of any circumstances that would give rise to a disclosure requirement under Rules 13.13 to Rules 13.19 of the Listing Rules.

UNAUDITED [REDACTED] ADJUSTED NET TANGIBLE ASSETS

Please refer to "Unaudited [REDACTED] Financial Information" set out in Appendix IIA to this document.

RECENT DEVELOPMENT AND NO MATERIAL ADVERSE CHANGE

For the eleven months ended 30 November 2025, we recorded an increase in revenue

[REDACTED] expenses we expect to incur would consist of (i) approximately HK$[REDACTED] [REDACTED] related expe nses and fees (including [REDACTED], SFC transaction levy, Stock Exchange trading fee and AFRC transaction levy), and (ii) approximately HK$[REDACTED] non-[REDACTED]-related expenses and fees (including (a) fees and expenses of legal advisors and accountants of approximately HK$[REDACTED] and (b) other fees and expenses of HK$[REDACTED]).

The [REDACTED] expenses above are the latest practicable estimate for reference only, and the actual amount may differ from this estimate.

DISCLOSURE REQUIRED UNDER THE LISTING RULES

The Directors have confirmed that as at the Latest Practicable Date, they were not aware of any circumstances that would give rise to a disclosure requirement under Rules 13.13 to Rules 13.19 of the Listing Rules.

UNAUDITED [REDACTED] ADJUSTED NET TANGIBLE ASSETS

Please refer to "Unaudited [REDACTED] Financial Information" set out in Appendix IIA to this document.

RECENT DEVELOPMENT AND NO MATERIAL ADVERSE CHANGE

For the eleven months ended 30 November 2025, we recorded an increase in revenue

[REDACTED] expenses we expect to incur would consist of (i) approximately HK$[REDACTED] [REDACTED] related expe nses and fees (including [REDACTED], SFC transaction levy, Stock Exchange trading fee and AFRC transaction levy), and (ii) approximately HK$[REDACTED] non-[REDACTED]-related expenses and fees (including (a) fees and expenses of legal advisors and accountants of approximately HK$[REDACTED] and (b) other fees and expenses of HK$[REDACTED]).

The [REDACTED] expenses above are the latest practicable estimate for reference only, and the actual amount may differ from this estimate.

DISCLOSURE REQUIRED UNDER THE LISTING RULES

The Directors have confirmed that as at the Latest Practicable Date, they were not aware of any circumstances that would give rise to a disclosure requirement under Rules 13.13 to Rules 13.19 of the Listing Rules.

UNAUDITED [REDACTED] ADJUSTED NET TANGIBLE ASSETS

Please refer to "Unaudited [REDACTED] Financial Information" set out in Appendix IIA to this document.

RECENT DEVELOPMENT AND NO MATERIAL ADVERSE CHANGE

For the eleven months ended 30 November 2025, we recorded an increase in revenue

Mr. Wang obtained his bachelor's degree in accounting from Harbin Institute of Technology ( ) in July 2005.

Mr. Li Sheng ( ), aged 40, has been our board secretary since September 2024 and joint company secretary since June 2025. He is responsible for information disclosure and investor relations management of our Group.

Prior to joining our Group, Mr. Li served as multiple titles at Industrial Securities Co., Ltd. ( ), a company listed on the Shanghai Stock Exchange under the stock code 601377, from 2011 to 2021, including sales manager of institutional client department, sales manager of financial and economic research institute, head of Guangzhou business of sales trading headquarters. He served as the head of South China group of institutional client headquarters at Shenwan Hongyuan Securities Co., Ltd. ( ) from September 2021 to September 2024.

Mr. Li obtained his bachelor's degree in environmental engineering from Nanjing University in PRC in June 2006 and his master's degree in finance from Sun Yat-sen University ( ) in PRC in June 2010.

FURTHER INFORMATION ABOUT PROF. CHEN

During his tenure with our Group, Prof. Chen, our executive Director, chairman of the Board and a Single Largest Shareholder, received certain regulatory and warning decisions (the "Decisions") from the Shenzhen Stock Exchange and the CSRC (collectively, the "Incidents"), listed as follows:

(i) Delayed notification of share pledge by Prof. Chen (March 2018) Prof. Chen pledged 17.7 million shares (about 9.22% of the Company's total share capital) on 6 March 2018, but only notified the Company of this pledge on 23 March 2018. This delay was due to his inadvertent oversight of the relevant reporting requirements. The Shenzhen Stock Exchange required Prof. Chen to be more attentive, correct the breach, and prevent recurrence.

(ii) Unreported related party transaction due to unnotified directorship (November 2018) Mr. Wu Feng, then an independent non-executive director of the Company, was appointed as an independent non-executive director of Tianjin Lishen Battery Co., Ltd. ( ), ("Tianjin Lishen") (a customer), making Tianjin Lishen a related party from December 2017. Wu Feng did not notify the Board, and the Board only approved and disclosed the related party transaction after business of RMB29.2 million had already occurred in October 2025 and Mr. Wu Feng resigned in the same month due to personal matters. The Board (including Prof. Chen) was required to address the oversight and prevent similar issues.

(iii) Delayed shareholding change disclosure by controlling shareholders (December 2020/January 2021) Prof. Chen and another controlling shareholder reduced their collective Company stake from about 26.49% to 20.81% (a decrease exceeding the 5% disclosure threshold) between August 2019 and November 2020, but delayed

Mr. Wang obtained his bachelor's degree in accounting from Harbin Institute of Technology ( ) in July 2005.

Mr. Li Sheng ( ), aged 40, has been our board secretary since September 2024 and joint company secretary since June 2025. He is responsible for information disclosure and investor relations management of our Group.

Prior to joining our Group, Mr. Li served as multiple titles at Industrial Securities Co., Ltd. ( ), a company listed on the Shanghai Stock Exchange under the stock code 601377, from 2011 to 2021, including sales manager of institutional client department, sales manager of financial and economic research institute, head of Guangzhou business of sales trading headquarters. He served as the head of South China group of institutional client headquarters at Shenwan Hongyuan Securities Co., Ltd. ( ) from September 2021 to September 2024.

Mr. Li obtained his bachelor's degree in environmental engineering from Nanjing University in PRC in June 2006 and his master's degree in finance from Sun Yat-sen University ( ) in PRC in June 2010.

FURTHER INFORMATION ABOUT PROF. CHEN

During his tenure with our Group, Prof. Chen, our executive Director, chairman of the Board and a Single Largest Shareholder, received certain regulatory and warning decisions (the "Decisions") from the Shenzhen Stock Exchange and the CSRC (collectively, the "Incidents"), listed as follows:

(i) Delayed notification of share pledge by Prof. Chen (March 2018) Prof. Chen pledged 17.7 million shares (about 9.22% of the Company's total share capital) on 6 March 2018, but only notified the Company of this pledge on 23 March 2018. This delay was due to his inadvertent oversight of the relevant reporting requirements. The Shenzhen Stock Exchange required Prof. Chen to be more attentive, correct the breach, and prevent recurrence.

(ii) Unreported related party transaction due to unnotified directorship (November 2018) Mr. Wu Feng, then an independent non-executive director of the Company, was appointed as an independent non-executive director of Tianjin Lishen Battery Co., Ltd. ( ), ("Tianjin Lishen") (a customer), making Tianjin Lishen a related party from December 2017. Wu Feng did not notify the Board, and the Board only approved and disclosed the related party transaction after business of RMB29.2 million had already occurred in October 2025 and Mr. Wu Feng resigned in the same month due to personal matters. The Board (including Prof. Chen) was required to address the oversight and prevent similar issues.

(iii) Delayed shareholding change disclosure by controlling shareholders (December 2020/January 2021) Prof. Chen and another controlling shareholder reduced their collective Company stake from about 26.49% to 20.81% (a decrease exceeding the 5% disclosure threshold) between August 2019 and November 2020, but delayed

Mr. Wang obtained his bachelor's degree in accounting from Harbin Institute of Technology ( ) in July 2005.

Mr. Li Sheng ( ), aged 40, has been our board secretary since September 2024 and joint company secretary since June 2025. He is responsible for information disclosure and investor relations management of our Group.

Prior to joining our Group, Mr. Li served as multiple titles at Industrial Securities Co., Ltd. ( ), a company listed on the Shanghai Stock Exchange under the stock code 601377, from 2011 to 2021, including sales manager of institutional client department, sales manager of financial and economic research institute, head of Guangzhou business of sales trading headquarters. He served as the head of South China group of institutional client headquarters at Shenwan Hongyuan Securities Co., Ltd. ( ) from September 2021 to September 2024.

Mr. Li obtained his bachelor's degree in environmental engineering from Nanjing University in PRC in June 2006 and his master's degree in finance from Sun Yat-sen University ( ) in PRC in June 2010.

FURTHER INFORMATION ABOUT PROF. CHEN

During his tenure with our Group, Prof. Chen, our executive Director, chairman of the Board and a Single Largest Shareholder, received certain regulatory and warning decisions (the "Decisions") from the Shenzhen Stock Exchange and the CSRC (collectively, the "Incidents"), listed as follows:

(i) Delayed notification of share pledge by Prof. Chen (March 2018) Prof. Chen pledged 17.7 million shares (about 9.22% of the Company's total share capital) on 6 March 2018, but only notified the Company of this pledge on 23 March 2018. This delay was due to his inadvertent oversight of the relevant reporting requirements. The Shenzhen Stock Exchange required Prof. Chen to be more attentive, correct the breach, and prevent recurrence.

(ii) Unreported related party transaction due to unnotified directorship (November 2018) Mr. Wu Feng, then an independent non-executive director of the Company, was appointed as an independent non-executive director of Tianjin Lishen Battery Co., Ltd. ( ), ("Tianjin Lishen") (a customer), making Tianjin Lishen a related party from December 2017. Wu Feng did not notify the Board, and the Board only approved and disclosed the related party transaction after business of RMB29.2 million had already occurred in October 2025 and Mr. Wu Feng resigned in the same month due to personal matters. The Board (including Prof. Chen) was required to address the oversight and prevent similar issues.

(iii) Delayed shareholding change disclosure by controlling shareholders (December 2020/January 2021) Prof. Chen and another controlling shareholder reduced their collective Company stake from about 26.49% to 20.81% (a decrease exceeding the 5% disclosure threshold) between August 2019 and November 2020, but delayed

by Directors and their close associates. The Company has established a comprehensive information disclosure management systems, including the following:

The “Insider Information Registration Policy”, which clearly defines the scope of inside information and persons with access to such information. Pursuant such

The flowchart below illustrates the critical role battery separator plays in the entire lithium-ion battery value chain:

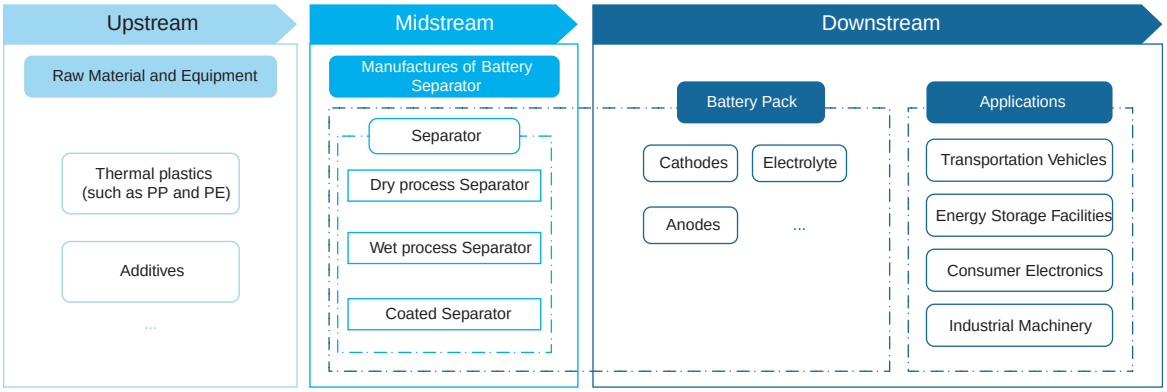

- Upstream: Major upstream suppliers in the battery separator industry encompass raw material suppliers and equipment manufacturers. Raw material suppliers provide materials such as thermal plastics, additives, packaging and auxiliary production materials, while the equipment suppliers provide machineries and tools.

- Midstream: Battery separator manufacturers at the midstream offer dry, wet and coated process separators that are suitable for different applications. The leading battery separator manufacturers that have in-house design capability generally design key production equipment for both dry and wet process separators that is highly compatible with their proprietary production techniques, which will enable them to produce high-quality separators with high level of precision and production efficiency.

- Downstream: The battery separators are applicable to lithium-ion batteries for a wide range of application scenarios, including transportation vehicles, industrial machinery, energy storage facilities and consumer electronics, etc.

We pride ourselves on being a reliable partner to other players in the lithium-ion battery value chain. Given the essential role of battery separators in the lithium-ion battery, the downstream lithium-ion battery manufacturers place great emphasis on the selection of suppliers of separators. As the first Chinese enterprise engaged in the research and manufacturing of lithium-ion battery separators according to Frost and Sullivan, and with more than 20 years of industry experience, we believe we have become a world-leading

The flowchart below illustrates the critical role battery separator plays in the entire lithium-ion battery value chain:

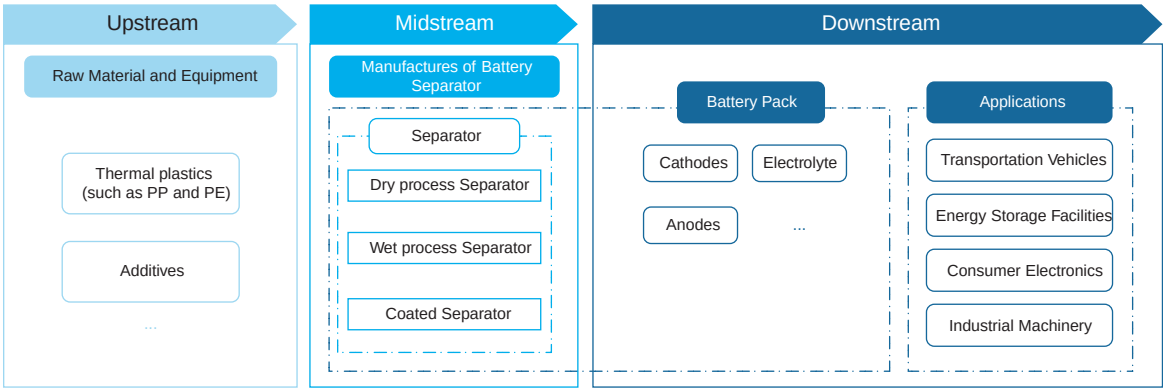

- Upstream: Major upstream suppliers in the battery separator industry encompass raw material suppliers and equipment manufacturers. Raw material suppliers provide materials such as thermal plastics, additives, packaging and auxiliary production materials, while the equipment suppliers provide machineries and tools.

- Midstream: Battery separator manufacturers at the midstream offer dry, wet and coated process separators that are suitable for different applications. The leading battery separator manufacturers that have in-house design capability generally design key production equipment for both dry and wet process separators that is highly compatible with their proprietary production techniques, which will enable them to produce high-quality separators with high level of precision and production efficiency.

- Downstream: The battery separators are applicable to lithium-ion batteries for a wide range of application scenarios, including transportation vehicles, industrial machinery, energy storage facilities and consumer electronics, etc.

We pride ourselves on being a reliable partner to other players in the lithium-ion battery value chain. Given the essential role of battery separators in the lithium-ion battery, the downstream lithium-ion battery manufacturers place great emphasis on the selection of suppliers of separators. As the first Chinese enterprise engaged in the research and manufacturing of lithium-ion battery separators according to Frost and Sullivan, and with more than 20 years of industry experience, we believe we have become a world-leading

OUR PRODUCTS

We are primarily engaged in the R&D, manufacturing and sales of lithium-ion battery separator which is an indispensable and core component of lithium-ion batteries. During the Track Record Period, we offer our customers a comprehensive product portfolio of lithium-ion batteries separators that are designed and manufactured in-house, which primarily include dry process separators, wet process separators and coated separators.

With more than 20 years of specialisation in the lithium-ion battery industry, our team

C

o
th
li

T
IN

R

S
a

P
S
re
S
p

p
d
d
d
re
s

N
[P

th
[P
U
a
H
o
th
E

A

s
o
a

D

P
o

A
d
re
in
th
re
m

D
su
la
a
su
B

as

Fi

D

F
c

A
d
r
i
t
r
n

D
s
l
a
s
E

a

F

DIVIDEND POLICY

We have a formal dividend policy. Subject to PRC laws and regulations, including the PRC Company Law ( ) and the No.3 Guideline for the Supervision of Listed Companies — Cash Dividend Distribution of Listed Companies (2025) (3 — 2025), and Articles 168 through 175 of the Articles of Association, in principle, we shall distribute dividends in cash. The profit distributed in cash in any single year shall not be less than 10% of the distributable profit realised for that year. Within any three consecutive years, our distributed cumulative profits in cash shall not be less than 30% of the average distributable profits realised in the latest three years. The specific dividend ratios shall be determined by our Board according to relevant regulations and our operating conditions, and shall be approved at our general meeting.

Any future plan to pay dividends will be made at the discretion of our Board of Directors subject to approval of our Shareholders. Any declaration as well as the amount of such declaration and payment will be subject to our Articles of Association and the relevant laws. Even if we decide to pay dividends, the form, frequency and amount may be based on a number of factors, including our future operations and earnings, capital requirements and surplus, general financial condition, contractual restrictions and other factors that the Board of Directors may deem relevant.

During the Track Record Period, we declared and paid dividends to our Shareholders as follows:

	Year ended 31 December			Nine months ended 30 September	
	2022	2023	2024	2024	2025
	RMB'000	RMB'000	RMB'000	RMB'000	RMB'000
				(unaudited)	
Final dividends	38,420	127,931	295,382	295,382	66,595

SHARE CAPITAL

RANKING

Upon the completion of the [REDACTED], our Shares will consist of A Shares and H Shares. A Shares and H Shares are all ordinary Shares in the share capital of our Company and are regarded as the same class of Shares under the Articles of Association.

Apart from certain qualified domestic institutional investors in the PRC, the qualified PRC investors under the Shanghai-Hong Kong Stock Connect or the Shenzhen-Hong Kong Stock Connect and other persons who are entitled to hold our H Shares pursuant to relevant PRC laws and regulations or upon approvals of any competent authorities, H Shares generally cannot be [REDACTED] for by or [REDACTED] between legal or natural persons of the PRC.

A Shares and H Shares shall carry the same rights in all other respects and, in particular, will rank equally for dividends or distributions declared, paid or made. All dividends in respect of our H Shares are to be paid by us in Hong Kong dollars whereas all dividends in respect of our A Shares are to be paid by us in Renminbi. In addition to cash, dividends may also be distributed in the form of Shares. Holders of our H Shares will receive share dividends in the form of H Shares, and holders of our A Shares will receive share dividends in the form of A Shares.

NO CONVERSION OF OUR A SHARES INT O H SHARES FOR [REDACTED] AND [REDACTED] ON THE HONG KONG STOCK EXCHANGE

Our A Shares and our H Shares are generally neither interchangeable nor fungible, and the market prices of our A Shares and our H Shares may be different after the [REDACTED]. The Guidelines on Applicatio n for "Full Circulation" of Domestic Unlisted Shares of H-share Companies (H
announced by the CSRC are not applicable to companies dual listed in the PRC and on the Hong Kong Stock Exchange. As at the Latest Practicable Date, there were no relevant rules or guidelines from the CSRC providing that A Shareholders may convert A shares held by them into H shares for [REDACTED] and [REDACTED] on the Hong Kong Stock Exchange.

APPROVAL FROM HOLDERS OF A SHAR ES REGARDING THE [REDACTED]

Approval from holders of A Shares is required for our Company to issue H Shares and seek the listing of H Shares on the Hong Kong Stock Exchange. Such approval was obtained by us at the shareholders' general meeting of our Company held on 21 May 2025 and is subject to the following major conditions:

(i) Size of the [REDACTED]: The proposed number of H Shares to be [REDACTED] shall not exceed approximately [REDACTED]% of the total issued share capital enlarged by the H Shares to be issued pursuant to the [REDACTED] (before the exercise of the [REDACTED]). The number of H Shares to be issued pursuant to the full exercise of the [REDACTED] shall not exceed [REDACTED]% of the total number of H Shares to be [REDACTED] initially under the [REDACTED].

SHARE CAPITAL

RANKING

Upon the completion of the [REDACTED], our Shares will consist of A Shares and H Shares. A Shares and H Shares are all ordinary Shares in the share capital of our Company and are regarded as the same class of Shares under the Articles of Association.

Apart from certain qualified domestic institutional investors in the PRC, the qualified PRC investors under the Shanghai-Hong Kong Stock Connect or the Shenzhen-Hong Kong Stock Connect and other persons who are entitled to hold our H Shares pursuant to relevant PRC laws and regulations or upon approvals of any competent authorities, H Shares generally cannot be [REDACTED] for by or [REDACTED] between legal or natural persons of the PRC.

A Shares and H Shares shall carry the same rights in all other respects and, in particular, will rank equally for dividends or distributions declared, paid or made. All dividends in respect of our H Shares are to be paid by us in Hong Kong dollars whereas all dividends in respect of our A Shares are to be paid by us in Renminbi. In addition to cash, dividends may also be distributed in the form of Shares. Holders of our H Shares will receive share dividends in the form of H Shares, and holders of our A Shares will receive share dividends in the form of A Shares.

NO CONVERSION OF OUR A SHARES INT O H SHARES FOR [REDACTED] AND [REDACTED] ON THE HONG KONG STOCK EXCHANGE

Our A Shares and our H Shares are generally neither interchangeable nor fungible, and the market prices of our A Shares and our H Shares may be different after the [REDACTED]. The Guidelines on Applicatio n for "Full Circulation" of Domestic Unlisted Shares of H-share Companies (H
announced by the CSRC are not applicable to companies dual listed in the PRC and on the Hong Kong Stock Exchange. As at the Latest Practicable Date, there were no relevant rules or guidelines from the CSRC providing that A Shareholders may convert A shares held by them into H shares for [REDACTED] and [REDACTED] on the Hong Kong Stock Exchange.

APPROVAL FROM HOLDERS OF A SHAR ES REGARDING THE [REDACTED]

Approval from holders of A Shares is required for our Company to issue H Shares and seek the listing of H Shares on the Hong Kong Stock Exchange. Such approval was obtained by us at the shareholders' general meeting of our Company held on 21 May 2025 and is subject to the following major conditions:

(i) Size of the [REDACTED]: The proposed number of H Shares to be [REDACTED] shall not exceed approximately [REDACTED]% of the total issued share capital enlarged by the H Shares to be issued pursuant to the [REDACTED] (before the exercise of the [REDACTED]). The number of H Shares to be issued pursuant to the full exercise of the [REDACTED] shall not exceed [REDACTED]% of the total number of H Shares to be [REDACTED] initially under the [REDACTED].

SHARE CAPITAL

RANKING

Upon the completion of the [REDACTED], our Shares will consist of A Shares and H Shares. A Shares and H Shares are all ordinary Shares in the share capital of our Company and are regarded as the same class of Shares under the Articles of Association.

Apart from certain qualified domestic institutional investors in the PRC, the qualified PRC investors under the Shanghai-Hong Kong Stock Connect or the Shenzhen-Hong Kong Stock Connect and other persons who are entitled to hold our H Shares pursuant to relevant PRC laws and regulations or upon approvals of any competent authorities, H Shares generally cannot be [REDACTED] for by or [REDACTED] between legal or natural persons of the PRC.

A Shares and H Shares shall carry the same rights in all other respects and, in particular, will rank equally for dividends or distributions declared, paid or made. All dividends in respect of our H Shares are to be paid by us in Hong Kong dollars whereas all dividends in respect of our A Shares are to be paid by us in Renminbi. In addition to cash, dividends may also be distributed in the form of Shares. Holders of our H Shares will receive share dividends in the form of H Shares, and holders of our A Shares will receive share dividends in the form of A Shares.

NO CONVERSION OF OUR A SHARES INT O H SHARES FOR [REDACTED] AND [REDACTED] ON THE HONG KONG STOCK EXCHANGE

Our A Shares and our H Shares are generally neither interchangeable nor fungible, and the market prices of our A Shares and our H Shares may be different after the [REDACTED]. The Guidelines on Applicatio n for "Full Circulation" of Domestic Unlisted Shares of H-share Companies (H
announced by the CSRC are not applicable to companies dual listed in the PRC and on the Hong Kong Stock Exchange. As at the Latest Practicable Date, there were no relevant rules or guidelines from the CSRC providing that A Shareholders may convert A shares held by them into H shares for [REDACTED] and [REDACTED] on the Hong Kong Stock Exchange.

APPROVAL FROM HOLDERS OF A SHAR ES REGARDING THE [REDACTED]

Approval from holders of A Shares is required for our Company to issue H Shares and seek the listing of H Shares on the Hong Kong Stock Exchange. Such approval was obtained by us at the shareholders' general meeting of our Company held on 21 May 2025 and is subject to the following major conditions:

(i) Size of the [REDACTED]: The proposed number of H Shares to be [REDACTED] shall not exceed approximately [REDACTED]% of the total issued share capital enlarged by the H Shares to be issued pursuant to the [REDACTED] (before the exercise of the [REDACTED]). The number of H Shares to be issued pursuant to the full exercise of the [REDACTED] shall not exceed [REDACTED]% of the total number of H Shares to be [REDACTED] initially under the [REDACTED].

THI
INF

RA

Sha
and

PR
Sto
rele
Sha
per

par
div
div
div
rec
sha

NO
[RE

the
[RE
Unl
ann
Hor
or g
the
Exc

AP

see
obt
and

THIS
INFO

RA

Sha
and

PR
Sto
rele
Sha
per

par
divi
divi
divi
rec
sha

NO
[RE

the
[RE
Unl
ann
Hor
or g
the
Exc

API

see
obt
and

RANKING

Upon the completion of the [REDACTED], our Shares will consist of A Shares and H Shares. A Shares and H Shares are all ordinary Shares in the share capital of our Company and are regarded as the same class of Shares under the Articles of Association.

Apart from certain qualified domestic institutional investors in the PRC, the qualified PRC investors under the Shanghai-Hong Kong Stock Connect or the Shenzhen-Hong Kong Stock Connect and other persons who are entitled to hold our H Shares pursuant to relevant PRC laws and regulations or upon approvals of any competent authorities, H Shares generally cannot be [REDACTED] for by or [REDACTED] between legal or natural persons of the PRC.

A Shares and H Shares shall carry the same rights in all other respects and, in particular, will rank equally for dividends or distributions declared, paid or made. All dividends in respect of our H Shares are to be paid by us in Hong Kong dollars whereas all dividends in respect of our A Shares are to be paid by us in Renminbi. In addition to cash, dividends may also be distributed in the form of Shares. Holders of our H Shares will receive share dividends in the form of H Shares, and holders of our A Shares will receive share dividends in the form of A Shares.

NO CONVERSION OF OUR A SHARES INTO H SHARES FOR [REDACTED] AND [REDACTED] ON THE HONG KONG STOCK EXCHANGE

Our A Shares and our H Shares are generally neither interchangeable nor fungible, and the market prices of our A Shares and our H Shares may be different after the [REDACTED]. The Guidelines on Application for "Full Circulation" of Domestic Unlisted Shares of H-share Companies (H
announced by the CSRC are not applicable to companies dual listed in the PRC and on the Hong Kong Stock Exchange. As at the Latest Practicable Date, there were no relevant rules or guidelines from the CSRC providing that A Shareholders may convert A shares held by them into H shares for [REDACTED] and [REDACTED] on the Hong Kong Stock Exchange.

APPROVAL FROM HOLDERS OF A SHARES REGARDING THE [REDACTED]

Approval from holders of A Shares is required for our Company to issue H Shares and seek the listing of H Shares on the Hong Kong Stock Exchange. Such approval was obtained by us at the shareholders' general meeting of our Company held on 21 May 2025 and is subject to the following major conditions:

(i) Size of the [REDACTED]: The proposed number of H Shares to be [REDACTED] shall not exceed approximately [REDACTED]% of the total issued share capital enlarged by the H Shares to be issued pursuant to the [REDACTED] (before the exercise of the [REDACTED]). The number of H Shares to be issued pursuant to the full exercise of the [REDACTED] shall not exceed [REDACTED]% of the total number of H Shares to be [REDACTED] initially under the [REDACTED].

SHARE CAPITAL

RANKING

Upon the completion of the [REDACTED], our Shares will consist of A Shares and H Shares. A Shares and H Shares are all ordinary Shares in the share capital of our Company and are regarded as the same class of Shares under the Articles of Association.

Apart from certain qualified domestic institutional investors in the PRC, the qualified PRC investors under the Shanghai-Hong Kong Stock Connect or the Shenzhen-Hong Kong Stock Connect and other persons who are entitled to hold our H Shares pursuant to relevant PRC laws and regulations or upon approvals of any competent authorities, H Shares generally cannot be [REDACTED] for by or [REDACTED] between legal or natural persons of the PRC.

A Shares and H Shares shall carry the same rights in all other respects and, in particular, will rank equally for dividends or distributions declared, paid or made. All dividends in respect of our H Shares are to be paid by us in Hong Kong dollars whereas all dividends in respect of our A Shares are to be paid by us in Renminbi. In addition to cash, dividends may also be distributed in the form of Shares. Holders of our H Shares will receive share dividends in the form of H Shares, and holders of our A Shares will receive share dividends in the form of A Shares.

NO CONVERSION OF OUR A SHARES INT O H SHARES FOR [REDACTED] AND [REDACTED] ON THE HONG KONG STOCK EXCHANGE

Our A Shares and our H Shares are generally neither interchangeable nor fungible, and the market prices of our A Shares and our H Shares may be different after the [REDACTED]. The Guidelines on Applicatio n for "Full Circulation" of Domestic Unlisted Shares of H-share Companies (H
announced by the CSRC are not applicable to companies dual listed in the PRC and on the Hong Kong Stock Exchange. As at the Latest Practicable Date, there were no relevant rules or guidelines from the CSRC providing that A Shareholders may convert A shares held by them into H shares for [REDACTED] and [REDACTED] on the Hong Kong Stock Exchange.

APPROVAL FROM HOLDERS OF A SHAR ES REGARDING THE [REDACTED]

Approval from holders of A Shares is required for our Company to issue H Shares and seek the listing of H Shares on the Hong Kong Stock Exchange. Such approval was obtained by us at the shareholders' general meeting of our Company held on 21 May 2025 and is subject to the following major conditions:

(i) Size of the [REDACTED]: The proposed number of H Shares to be [REDACTED] shall not exceed approximately [REDACTED]% of the total issued share capital enlarged by the H Shares to be issued pursuant to the [REDACTED] (before the exercise of the [REDACTED]). The number of H Shares to be issued pursuant to the full exercise of the [REDACTED] shall not exceed [REDACTED]% of the total number of H Shares to be [REDACTED] initially under the [REDACTED].

SHARE CAPITAL

RANKING

Upon the completion of the [REDACTED], our Shares will consist of A Shares and H Shares. A Shares and H Shares are all ordinary Shares in the share capital of our Company and are regarded as the same class of Shares under the Articles of Association.

Apart from certain qualified domestic institutional investors in the PRC, the qualified PRC investors under the Shanghai-Hong Kong Stock Connect or the Shenzhen-Hong Kong Stock Connect and other persons who are entitled to hold our H Shares pursuant to relevant PRC laws and regulations or upon approvals of any competent authorities, H Shares generally cannot be [REDACTED] for by or [REDACTED] between legal or natural persons of the PRC.

A Shares and H Shares shall carry the same rights in all other respects and, in particular, will rank equally for dividends or distributions declared, paid or made. All dividends in respect of our H Shares are to be paid by us in Hong Kong dollars whereas all dividends in respect of our A Shares are to be paid by us in Renminbi. In addition to cash, dividends may also be distributed in the form of Shares. Holders of our H Shares will receive share dividends in the form of H Shares, and holders of our A Shares will receive share dividends in the form of A Shares.

NO CONVERSION OF OUR A SHARES INT O H SHARES FOR [REDACTED] AND [REDACTED] ON THE HONG KONG STOCK EXCHANGE

Our A Shares and our H Shares are generally neither interchangeable nor fungible, and the market prices of our A Shares and our H Shares may be different after the [REDACTED]. The Guidelines on Applicatio n for "Full Circulation" of Domestic Unlisted Shares of H-share Companies (H
announced by the CSRC are not applicable to companies dual listed in the PRC and on the Hong Kong Stock Exchange. As at the Latest Practicable Date, there were no relevant rules or guidelines from the CSRC providing that A Shareholders may convert A shares held by them into H shares for [REDACTED] and [REDACTED] on the Hong Kong Stock Exchange.

APPROVAL FROM HOLDERS OF A SHAR ES REGARDING THE [REDACTED]

Approval from holders of A Shares is required for our Company to issue H Shares and seek the listing of H Shares on the Hong Kong Stock Exchange. Such approval was obtained by us at the shareholders' general meeting of our Company held on 21 May 2025 and is subject to the following major conditions:

(i) Size of the [REDACTED]: The proposed number of H Shares to be [REDACTED] shall not exceed approximately [REDACTED]% of the total issued share capital enlarged by the H Shares to be issued pursuant to the [REDACTED] (before the exercise of the [REDACTED]). The number of H Shares to be issued pursuant to the full exercise of the [REDACTED] shall not exceed [REDACTED]% of the total number of H Shares to be [REDACTED] initially under the [REDACTED].

SHARE CAPITAL

RANKING

Upon the completion of the [REDACTED], our Shares will consist of A Shares and H Shares. A Shares and H Shares are all ordinary Shares in the share capital of our Company and are regarded as the same class of Shares under the Articles of Association.

Apart from certain qualified domestic institutional investors in the PRC, the qualified PRC investors under the Shanghai-Hong Kong Stock Connect or the Shenzhen-Hong Kong Stock Connect and other persons who are entitled to hold our H Shares pursuant to relevant PRC laws and regulations or upon approvals of any competent authorities, H Shares generally cannot be [REDACTED] for by or [REDACTED] between legal or natural persons of the PRC.

A Shares and H Shares shall carry the same rights in all other respects and, in particular, will rank equally for dividends or distributions declared, paid or made. All dividends in respect of our H Shares are to be paid by us in Hong Kong dollars whereas all dividends in respect of our A Shares are to be paid by us in Renminbi. In addition to cash, dividends may also be distributed in the form of Shares. Holders of our H Shares will receive share dividends in the form of H Shares, and holders of our A Shares will receive share dividends in the form of A Shares.

NO CONVERSION OF OUR A SHARES INT O H SHARES FOR [REDACTED] AND [REDACTED] ON THE HONG KONG STOCK EXCHANGE

Our A Shares and our H Shares are generally neither interchangeable nor fungible, and the market prices of our A Shares and our H Shares may be different after the [REDACTED]. The Guidelines on Applicatio n for "Full Circulation" of Domestic Unlisted Shares of H-share Companies (H
announced by the CSRC are not applicable to companies dual listed in the PRC and on the Hong Kong Stock Exchange. As at the Latest Practicable Date, there were no relevant rules or guidelines from the CSRC providing that A Shareholders may convert A shares held by them into H shares for [REDACTED] and [REDACTED] on the Hong Kong Stock Exchange.

APPROVAL FROM HOLDERS OF A SHAR ES REGARDING THE [REDACTED]

Approval from holders of A Shares is required for our Company to issue H Shares and seek the listing of H Shares on the Hong Kong Stock Exchange. Such approval was obtained by us at the shareholders' general meeting of our Company held on 21 May 2025 and is subject to the following major conditions:

(i) Size of the [REDACTED]: The proposed number of H Shares to be [REDACTED] shall not exceed approximately [REDACTED]% of the total issued share capital enlarged by the H Shares to be issued pursuant to the [REDACTED] (before the exercise of the [REDACTED]). The number of H Shares to be issued pursuant to the full exercise of the [REDACTED] shall not exceed [REDACTED]% of the total number of H Shares to be [REDACTED] initially under the [REDACTED].

SHARE CAPITAL

RANKING

Upon the completion of the [REDACTED], our Shares will consist of A Shares and H Shares. A Shares and H Shares are all ordinary Shares in the share capital of our Company and are regarded as the same class of Shares under the Articles of Association.

Apart from certain qualified domestic institutional investors in the PRC, the qualified PRC investors under the Shanghai-Hong Kong Stock Connect or the Shenzhen-Hong Kong Stock Connect and other persons who are entitled to hold our H Shares pursuant to relevant PRC laws and regulations or upon approvals of any competent authorities, H Shares generally cannot be [REDACTED] for by or [REDACTED] between legal or natural persons of the PRC.

A Shares and H Shares shall carry the same rights in all other respects and, in particular, will rank equally for dividends or distributions declared, paid or made. All dividends in respect of our H Shares are to be paid by us in Hong Kong dollars whereas all dividends in respect of our A Shares are to be paid by us in Renminbi. In addition to cash, dividends may also be distributed in the form of Shares. Holders of our H Shares will receive share dividends in the form of H Shares, and holders of our A Shares will receive share dividends in the form of A Shares.

NO CONVERSION OF OUR A SHARES INT O H SHARES FOR [REDACTED] AND [REDACTED] ON THE HONG KONG STOCK EXCHANGE

Our A Shares and our H Shares are generally neither interchangeable nor fungible, and the market prices of our A Shares and our H Shares may be different after the [REDACTED]. The Guidelines on Applicatio n for "Full Circulation" of Domestic Unlisted Shares of H-share Companies (H
announced by the CSRC are not applicable to companies dual listed in the PRC and on the Hong Kong Stock Exchange. As at the Latest Practicable Date, there were no relevant rules or guidelines from the CSRC providing that A Shareholders may convert A shares held by them into H shares for [REDACTED] and [REDACTED] on the Hong Kong Stock Exchange.

APPROVAL FROM HOLDERS OF A SHAR ES REGARDING THE [REDACTED]

Approval from holders of A Shares is required for our Company to issue H Shares and seek the listing of H Shares on the Hong Kong Stock Exchange. Such approval was obtained by us at the shareholders' general meeting of our Company held on 21 May 2025 and is subject to the following major conditions:

(i) Size of the [REDACTED]: The proposed number of H Shares to be [REDACTED] shall not exceed approximately [REDACTED]% of the total issued share capital enlarged by the H Shares to be issued pursuant to the [REDACTED] (before the exercise of the [REDACTED]). The number of H Shares to be issued pursuant to the full exercise of the [REDACTED] shall not exceed [REDACTED]% of the total number of H Shares to be [REDACTED] initially under the [REDACTED].

Note:

(1) The dates of the appointment refer to the appointment of the relevant positions in our Company after its conversion into a joint stock company with limited liability in September 2008. For the details of the conversion, please see "History and Corporate Structure — Incorporation of our Company and Conversion into a Joint Stock Company".

Prof. Chen Xiufeng ( ), aged 58, is an executive Director, chairman of the Board and general manager of our Company. For Prof. Chen's biography, please see "— Directors — Executive Directors" in this section.

Dr. ZHANG XIAOMIN , aged 58, is an executive Director, vice general manager and chief technology officer of our Company. For Dr. Zhang's biography, please see "— Directors — Executive Directors" in this section.

Mr. Xia Jun ( ), aged 45, has been our vice president of marketing since February 2023 and our vice general manager since January 2024. He is responsible for daily operation of our Group.

Prior to joining our Group, Mr. Xia served as marketing & sales senior manager at Daikin Chemical International Trading (Shanghai) Co., Ltd. ( ) from March 2003 to October 2006 and Daikin Fluorochemicals (China) Co., Ltd. from October 2006 to September 2014. He served as Northeast Asia Sales Director at SI Group-Shanghai Co., Ltd. ( ) from September 2014 to January 2018. He served as Greater China materials sales director at Solvay (Shanghai) Co., Ltd. ( ) from January 2018 to March 2023.

The graph below demonstrates our global presence, showcasing the network of our

The graph below demonstrates our global presence, showcasing the network of our

The graph below demonstrates our global presence, showcasing the network of our

For details of such transactions, please see Note 38 of the Accountants Report in Appendix I to this document.

CAPITAL EXPENDITURES

Our capital expenditure primarily consisted of (i) payment and prepayment for purchase of property, plant and equipment related to the construction of our manufacturing bases, (ii) purchase of intangible assets, and (iii) additions to right-of-use assets. The table below sets forth our capital expenditures for the periods indicated.

	Year ended 31 December			Nine months ended 30 September
	2022	2023	2024	2025
	RMB'000	RMB'000	RMB'000	RMB'000
Payment and prepayment for purchase of property, plant and equipment	2,346,873	3,950,726	4,548,570	2,886,554
Purchase of intangible assets	474	293	4,058	14,051
Additions to right-of-use assets	1,176	258,750	—	27,566
Total	2,348,523	4,209,769	4,552,628	2,928,171

Our capital expenditures were RMB2,348.5 million, RMB4,209.8 million, RMB4,552.6 million and RMB2,928.2 million in 2022, 2023, 2024 and the nine months ended 30 September 2025, respectively. We expect to incur additional capital expenditures in 2025 primarily for purchases of property, plant and equipment. We plan to finance such capital expenditures through cash generated from our operations, bank loans and the net [REDACTED] from the [REDACTED]. Our actual capital expenditures may differ from the amounts set forth above due to various factors, including our future cash flows, results of operations and financial condition.

CAPITAL COMMITMENTS

As at 31 December 2022, 2023 and 2024 and 30 September 2025, our capital commitments amounted to RMB3,777.5 million, RMB3,517.0 million, RMB4,780.6 million and RMB2,912.8 million, primarily related to the construction of our manufacturing bases.

CONTINGENT LIABILITIES

Save as disclosed in Note 7 of the Accountants' Report in Appendix I to this document, as at 31 December 2022, 2023 and 2024 and 30 September 2025, we did not have any other material contingent liabilities. As at the Latest Practicable Date, there have been no material changes to our contingent liabilities.

OFF-BALANCE SHEET ARRANGEMENTS

As at the Latest Practicable Date, we did not enter into any off-balance sheet transactions or arrangements.

DISCLOSURE ABOUT FINANCIAL RISK

We are exposed to various types of financial risks in the ordinary course of our business, including foreign currency risk, price risk, interest rate risk, credit risk and liquidity risk. For more information, please see Note 41 of the Accountants' Report in Appendix I to this document.

Foreign Currency Risk

Foreign currency risk refers to the risk that the fair value or future cash flows of a financial instrument will fluctuate because of changes in foreign exchange rates.

Price Risk

We are exposed to equity price risk mainly arising from listed equity investments held by us that are classified as FVTPL. To manage its price risk arising from investments, we diversify our portfolio. Diversification of the p ortfolio is done in accordance with the limits set by us. Each investment is managed by senior management on a case-by-case basis.

Interest rate risk

Our interest rate risk primarily arises from long-term interest-bearing borrowings, corporate bonds and lease liabilities. Long-term borrowings issued atvariable rates expose us to cash flow interest rate risk. Long-termborrowings issued at fixed rates, corporate bonds and lease liabilities bearing fixed rates expose us to fair value interest rate risk.

We have been monitoring the level of interestates. The increase in the interest rates will increase the interest costs of borrowings a

DIVIDEND POLICY

We have a formal dividend policy. Subject to PRC laws and regulations, including the PRC Company Law ( ) and the No.3 Guideline for the Supervision of Listed Companies — Cash Dividend Distribution of Listed Companies (2025) (3 — 2025), and Articles 168 through 175 of the Articles of Association, in principle, we shall distribute dividends in cash. The profit distributed in cash in any single year shall not be less than 10% of the distributable profit realised for that year. Within any three consecutive years, our distributed cumulative profits in cash shall not be less than 30% of the average distributable profits realised in the latest three years. The specific dividend ratios shall be determined by our Board according to relevant regulations and our operating conditions, and shall be approved at our general meeting.

Any future plan to pay dividends will be made at the discretion of our Board of Directors subject to approval of our Shareholders. Any declaration as well as the amount of such declaration and payment will be subject to our Articles of Association and the relevant laws. Even if we decide to pay dividends, the form, frequency and amount may be based on a number of factors, including our future operations and earnings, capital requirements and surplus, general financial condition, contractual restrictions and other factors that the Board of Directors may deem relevant.

During the Track Record Period, we declared and paid dividends to our Shareholders as follows:

	Year ended 31 December			Nine months ended 30 September	
	2022	2023	2024	2024	2025
	RMB'000	RMB'000	RMB'000	RMB'000	RMB'000
				(unaudited)	
Final dividends	38,420	127,931	295,382	295,382	66,595

[REDACTED] expenses we expect to incur would consist of (i) approximately HK$[REDACTED] [REDACTED] related expe nses and fees (including [REDACTED], SFC transaction levy, Stock Exchange trading fee and AFRC transaction levy), and (ii) approximately HK$[REDACTED] non-[REDACTED]-related expenses and fees (including (a) fees and expenses of legal advisors and accountants of approximately HK$[REDACTED] and (b) other fees and expenses of HK$[REDACTED]).

The [REDACTED] expenses above are the latest practicable estimate for reference only, and the actual amount may differ from this estimate.

DISCLOSURE REQUIRED UNDER THE LISTING RULES

The Directors have confirmed that as at the Latest Practicable Date, they were not aware of any circumstances that would give rise to a disclosure requirement under Rules 13.13 to Rules 13.19 of the Listing Rules.

UNAUDITED [REDACTED] ADJUSTED NET TANGIBLE ASSETS

Please refer to "Unaudited [REDACTED] Financial Information" set out in Appendix IIA to this document.

RECENT DEVELOPMENT AND NO MATERIAL ADVERSE CHANGE

For the eleven months ended 30 November 2025, we recorded an increase in revenue

Semi-Solid-State Electrolyte Separator Technology

A semi-solid-state electrolyte separator is an important component in semi-solid-state batteries, acting as an intermediate technology between conventional liquid electrolyte batteries and solid-state batteries. Semi-solid-state electrolyte separators are produced using advanced composite coating and integrated moulding technologies. Composite coating involves applying a semi-solid electrolyte onto a separator substrate to enhance ionic conductivity and stability. Integrated moulding combines fibre frameworks with solid electrolytes, resulting in high strength, high lithium-ion conductivity and low interfacial impedance. Semi-solid-state electrolyte separators are essential for semi-solid-state batteries because they enhance safety by reducing the risk of leaks and fires associated with liquid electrolytes. They also improve energy density, leading to more powerful and longer-lasting batteries. Additionally, these separators offer better ionic conductivity and mechanical strength, which boosts overall battery performance and durability. They are cost-effective, utilising existing lithium-ion battery manufacturing processes, and serve as a crucial bridge between current lithium-ion batteries and future solid-state batteries, facilitating technological advancements.

Our semi-solid-state electrolyte separators, with a thicknesses range of 3–20 m, are engineered for high-performance EVs, drones and robots. These separators feature superior low-temperature performance, enhanced safety profiles and low interface resistance, making them ideal for advanced battery solutions. For example, our LATP electrolyte membrane demonstrates excellent low-temperature performance, with an improvement of around 8% in low-temperature cycling at –25°C as compared to current lithium-ion battery separators, surpassing that of most separators, which typically exhibit capacity retention losses exceeding 10 to 15% under the same conditions. Our semi-solid-state electrolyte separator products have been designed to c12uu4(a)1(nallo)-858.3(igrlyt)-4-stateLitosi91.94(di

COMPLIANCE ADVISOR

We have appointed Goldlink Capital (Corporate Finance) Limited as our compliance advisor (the "Compliance Advisor") pursuant to Rule 3A.19 of the Listing Rules. The Compliance Advisor will provide us with guidance and advice as to compliance with the requirements under the Listing Rules and applicable laws. Pursuant to Rule 3A.23 of the Listing Rules, the Compliance Advisor will advise our Company, among others, in the following circumstances:

- before the publication of any regulatory announcement, circular, or financial report;
- where a transaction, which might be a notifiable or connected transaction, is contemplated, including share issues and share repurchases;
- where we propose to use the [REDACTED] of the [REDACTED] in a manner different from that detailed in this document or where the business activities, development, or results of our Group deviate from any forecast, estimate, or other information in this document; and
- where the Stock Exchange makes an inquiry to our Company regarding unusual movements in the price or [REDACTED] of our listed securities or any other matters in accordance with Rule 13.10 of the Listing Rules.

The term of appointment of the Compliance Advisor shall commence on the [REDACTED] Date and is expected to end on the date on which we comply with Rule

solid-state electrolyte membrane — poor contact between solid electrolytes and electrodes, leading to slow kinetics, and chemo-mechanical issues that cause contact loss or interphase formation, reducing efficiency. Solid-state electrolyte membranes play a critical role in the advancement of solid-state battery technologies, offering a range of important benefits. By replacing flammable liquid electrolytes, they greatly improve safety, effectively reducing the risks of leakage and fire. Their design allows for the use of lithium metal anodes, which deliver significantly higher energy densities than conventional graphite anodes. This contributes to the development of lighter, more powerful batteries. In addition, these membranes provide superior mechanical and thermal stability, resulting in batteries that are both longer lasting and more reliable over time. Solid-state batteries equipped with these membranes can achieve higher power densities and support faster charging, significantly boosting overall performance. The adoption of solid-state technology also enables innovative battery configurations, including flexible and bipolar designs, which are essential for future applications in consumer electronics, transportation vehicles and energy storage.

In the battery industry, solid-state electrolyte membranes mainly face two major technical challenges. Firstly, the production process is highly demanding, making large-scale manufacturing difficult and resulting in extremely high costs. Secondly, achieving thin membranes is technically challenging, and it is generally difficult to reduce the thickness of solid-state electrolyte membranes to below 30 μm. By using integrated forming technology for production, we believe our electrolyte membrane overcomes the difficulties of mass-production, enabling large-scale manufacturing for future applications and advancing the rapid commercialisation of solid-state batteries. Furthermore, this integrated forming technology allows for further membrane thinning, enhancing the energy density of solid-state batteries.

We design solid-state electrolyte membranes with a thicknesses range of 7–37 μm, targeting high-end digital and power battery sectors. Our proprietary integrated moulding technology combines a robust fibre framework with cutting-edge solid electrolytes, resulting in membranes offering high mechanical strength, impressive lithium-ion conductivity and low interfacial impedance. For instance, we have developed an integrated, self-developed solid-state electrolyte membrane features a tensile strength of

SHARE CAPITAL

This section presents certain information regarding our share capital before and upon completion of the [REDACTED].

BEFORE THE [REDACTED]

As at the Latest Practicable Date, our share capital was RMB1,345,710,639, comprising 1,345,710,639 A Shares with a nominal value of RMB1.00 each.

UPON COMPLETION OF THE [REDACTED]

Immediately following completion of the [REDACTED] (assuming that the [REDACTED] is not exercised), the share capital of our Company immediately following completion of the [REDACTED] will be as follows:

Description of Shares	Number of Shares	Approximate percentage to total share capital (%)
A Shares in issue	1,345,710,639	[REDACTED]
H Shares to be issued under the [REDACTED]	[REDACTED]	[REDACTED]
Total	[REDACTED]	100.00

Immediately following completion of the [REDACTED] (assuming the [REDACTED] is fully exercised) the share capital of our Company immediately following completion of the [REDACTED] will be as follows:

Description of Shares	Number of Shares	Approximate percentage to total share capital (%)
A Shares in issue	1,345,710,639	[REDACTED]
H Shares to be issued under the [REDACTED]	[REDACTED]	[REDACTED]
Total	[REDACTED]	100.00

COMPLIANCE ADVISOR

We have appointed Goldlink Capital (Corporate Finance) Limited as our compliance advisor (the "Compliance Advisor") pursuant to Rule 3A.19 of the Listing Rules. The Compliance Advisor will provide us with guidance and advice as to compliance with the requirements under the Listing Rules and applicable laws. Pursuant to Rule 3A.23 of the Listing Rules, the Compliance Advisor will advise our Company, among others, in the following circumstances:

- before the publication of any regulatory announcement, circular, or financial report;
- where a transaction, which might be a notifiable or connected transaction, is contemplated, including share issues and share repurchases;
- where we propose to use the [REDACTED] of the [REDACTED] in a manner different from that detailed in this document or where the business activities, development, or results of our Group deviate from any forecast, estimate, or other information in this document; and
- where the Stock Exchange makes an inquiry to our Company regarding unusual movements in the price or [REDACTED] of our listed securities or any other matters in accordance with Rule 13.10 of the Listing Rules.

The term of appointment of the Compliance Advisor shall commence on the [REDACTED] Date and is expected to end on the date on which we comply with Rule

solid-state electrolyte membrane — poor contact between solid electrolytes and electrodes, leading to slow kinetics, and chemo-mechanical issues that cause contact loss or interphase formation, reducing efficiency. Solid-state electrolyte membranes play a critical role in the advancement of solid-state battery technologies, offering a range of important benefits. By replacing flammable liquid electrolytes, they greatly improve safety, effectively reducing the risks of leakage and fire. Their design allows for the use of lithium metal anodes, which deliver significantly higher energy densities than conventional graphite anodes. This contributes to the development of lighter, more powerful batteries. In addition, these membranes provide superior mechanical and thermal stability, resulting in batteries that are both longer lasting and more reliable over time. Solid-state batteries equipped with these membranes can achieve higher power densities and support faster charging, significantly boosting overall performance. The adoption of solid-state technology also enables innovative battery configurations, including flexible and bipolar designs, which are essential for future applications in consumer electronics, transportation vehicles and energy storage.

In the battery industry, solid-state electrolyte membranes mainly face two major technical challenges. Firstly, the production process is highly demanding, making large-scale manufacturing difficult and resulting in extremely high costs. Secondly, achieving thin membranes is technically challenging, and it is generally difficult to reduce the thickness of solid-state electrolyte membranes to below 30 μm. By using integrated forming technology for production, we believe our electrolyte membrane overcomes the difficulties of mass-production, enabling large-scale manufacturing for future applications and advancing the rapid commercialisation of solid-state batteries. Furthermore, this integrated forming technology allows for further membrane thinning, enhancing the energy density of solid-state batteries.

We design solid-state electrolyte membranes with a thicknesses range of 7–37 μm, targeting high-end digital and power battery sectors. Our proprietary integrated moulding technology combines a robust fibre framework with cutting-edge solid electrolytes, resulting in membranes offering high mechanical strength, impressive lithium-ion conductivity and low interfacial impedance. For instance, we have developed an integrated, self-developed solid-state electrolyte membrane features a tensile strength of

Operational Independence

Our Company will continue to operate independently from our Single Largest Shareholders after the [REDACTED]. Our Company has our own organisational structure with independent departments, each with specific areas of responsibility. Furthermore, we have independent production capabilities and technology relating to our Group's business and do not rely on our Single Largest Shareholders or any of their close associates. Our

Semi-Solid-State Electrolyte Separator Technology

A semi-solid-state electrolyte separator is an important component in semi-solid-state batteries, acting as an intermediate technology between conventional liquid electrolyte batteries and solid-state batteries. Semi-solid-state electrolyte separators are produced using advanced composite coating and integrated moulding technologies. Composite coating involves applying a semi-solid electrolyte onto a separator substrate to enhance ionic conductivity and stability. Integrated moulding combines fibre frameworks with solid electrolytes, resulting in high strength, high lithium-ion conductivity and low interfacial impedance. Semi-solid-state electrolyte separators are essential for semi-solid-state batteries because they enhance safety by reducing the risk of leaks and fires associated with liquid electrolytes. They also improve energy density, leading to more powerful and longer-lasting batteries. Additionally, these separators offer better ionic conductivity and mechanical strength, which boosts overall battery performance and durability. They are cost-effective, utilising existing lithium-ion battery manufacturing processes, and serve as a crucial bridge between current lithium-ion batteries and future solid-state batteries, facilitating technological advancements.

Our semi-solid-state electrolyte separators, with a thicknesses range of 3–20 m, are engineered for high-performance EVs, drones and robots. These separators feature superior low-temperature performance, enhanced safety profiles and low interface resistance, making them ideal for advanced battery solutions. For example, our LATP electrolyte membrane demonstrates excellent low-temperature performance, with an improvement of around 8% in low-temperature cycling at –25°C as compared to current lithium-ion battery separators, surpassing that of most separators, which typically exhibit capacity retention losses exceeding 10 to 15% under the same conditions. Our semi-solid-state electrolyte separator products have been designed to c12uu4(a)1(nallo)-858.3(igrlyt)-4-stateLitosi91.94(di

Semi-Solid-State Electrolyte Separator Technology

A semi-solid-state electrolyte separator is an important component in semi-solid-state batteries, acting as an intermediate technology between conventional liquid electrolyte batteries and solid-state batteries. Semi-solid-state electrolyte separators are produced using advanced composite coating and integrated moulding technologies. Composite coating involves applying a semi-solid electrolyte onto a separator substrate to enhance ionic conductivity and stability. Integrated moulding combines fibre frameworks with solid electrolytes, resulting in high strength, high lithium-ion conductivity and low interfacial impedance. Semi-solid-state electrolyte separators are essential for semi-solid-state batteries because they enhance safety by reducing the risk of leaks and fires associated with liquid electrolytes. They also improve energy density, leading to more powerful and longer-lasting batteries. Additionally, these separators offer better ionic conductivity and mechanical strength, which boosts overall battery performance and durability. They are cost-effective, utilising existing lithium-ion battery manufacturing processes, and serve as a crucial bridge between current lithium-ion batteries and future solid-state batteries, facilitating technological advancements.

Our semi-solid-state electrolyte separators, with a thicknesses range of 3–20 m, are engineered for high-performance EVs, drones and robots. These separators feature superior low-temperature performance, enhanced safety profiles and low interface resistance, making them ideal for advanced battery solutions. For example, our LATP electrolyte membrane demonstrates excellent low-temperature performance, with an improvement of around 8% in low-temperature cycling at –25°C as compared to current lithium-ion battery separators, surpassing that of most separators, which typically exhibit capacity retention losses exceeding 10 to 15% under the same conditions. Our semi-solid-state electrolyte separator products have been designed to c12uu4(a)1(nallo)-858.3(igrlyt)-4-stateLitosi91.94(di

Rule 3.13 of the Listing Rules

Each of the independent non-executive Directors has confirmed (i) his/her independence as regards each of the factors referred to in Rules 3.13(1) to (8) of the Listing Rules, (ii) he/she has no past or present financial or other interest in the business of the Company or its subsidiaries or any connection with any core connected person of our Company under the Listing Rules as at the Latest Practicable Date, and (iii) that there are no other factors that may affect his/her independence at the time of his/her appointments.

SENIOR MANAGEMENT

The senior management is responsible for the day-to-day management of our business. None of the members of senior management are related to our Directors or other members of senior management. The following table sets out the information of members of our senior management.

Name	Age	Position(s)	Date of joining our Group	Date of appointment as Director/ senior management[1]	Roles and responsibilities
Chen Xiufeng ( )	58	Executive Director, chairman of our Board and general manager			

Rule 3.13 of the Listing Rules

Each of the independent non-executive Directors has confirmed (i) his/her independence as regards each of the factors referred to in Rules 3.13(1) to (8) of the Listing Rules, (ii) he/she has no past or present financial or other interest in the business of the Company or its subsidiaries or any connection with any core connected person of our Company under the Listing Rules as at the Latest Practicable Date, and (iii) that there are no other factors that may affect his/her independence at the time of his/her appointments.

SENIOR MANAGEMENT

The senior management is responsible for the day-to-day management of our business. None of the members of senior management are related to our Directors or other members of senior management. The following table sets out the information of members of our senior management.

Name	Age	Position(s)	Date of joining our Group	Date of appointment as Director/ senior management[1]	Roles and responsibilities
Chen Xiufeng ( )	58	Executive Director, chairman of our Board and general manager			

Semi-Solid-State Electrolyte Separator Technology

A semi-solid-state electrolyte separator is an important component in semi-solid-state batteries, acting as an intermediate technology between conventional liquid electrolyte batteries and solid-state batteries. Semi-solid-state electrolyte separators are produced using advanced composite coating and integrated moulding technologies. Composite coating involves applying a semi-solid electrolyte onto a separator substrate to enhance ionic conductivity and stability. Integrated moulding combines fibre frameworks with solid electrolytes, resulting in high strength, high lithium-ion conductivity and low interfacial impedance. Semi-solid-state electrolyte separators are essential for semi-solid-state batteries because they enhance safety by reducing the risk of leaks and fires associated with liquid electrolytes. They also improve energy density, leading to more powerful and longer-lasting batteries. Additionally, these separators offer better ionic conductivity and mechanical strength, which boosts overall battery performance and durability. They are cost-effective, utilising existing lithium-ion battery manufacturing processes, and serve as a crucial bridge between current lithium-ion batteries and future solid-state batteries, facilitating technological advancements.

Our semi-solid-state electrolyte separators, with a thicknesses range of 3–20 m, are engineered for high-performance EVs, drones and robots. These separators feature superior low-temperature performance, enhanced safety profiles and low interface resistance, making them ideal for advanced battery solutions. For example, our LATP electrolyte membrane demonstrates excellent low-temperature performance, with an improvement of around 8% in low-temperature cycling at –25°C as compared to current lithium-ion battery separators, surpassing that of most separators, which typically exhibit capacity retention losses exceeding 10 to 15% under the same conditions. Our semi-solid-state electrolyte separator products have been designed to c12uu4(a)1(nallo)-858.3(igrlyt)-4-stateLitosi91.94(di

Semi-Solid-State Electrolyte Separator Technology

A semi-solid-state electrolyte separator is an important component in semi-solid-state batteries, acting as an intermediate technology between conventional liquid electrolyte batteries and solid-state batteries. Semi-solid-state electrolyte separators are produced using advanced composite coating and integrated moulding technologies. Composite coating involves applying a semi-solid electrolyte onto a separator substrate to enhance ionic conductivity and stability. Integrated moulding combines fibre frameworks with solid electrolytes, resulting in high strength, high lithium-ion conductivity and low interfacial impedance. Semi-solid-state electrolyte separators are essential for semi-solid-state batteries because they enhance safety by reducing the risk of leaks and fires associated with liquid electrolytes. They also improve energy density, leading to more powerful and longer-lasting batteries. Additionally, these separators offer better ionic conductivity and mechanical strength, which boosts overall battery performance and durability. They are cost-effective, utilising existing lithium-ion battery manufacturing processes, and serve as a crucial bridge between current lithium-ion batteries and future solid-state batteries, facilitating technological advancements.

Our semi-solid-state electrolyte separators, with a thicknesses range of 3–20 m, are engineered for high-performance EVs, drones and robots. These separators feature superior low-temperature performance, enhanced safety profiles and low interface resistance, making them ideal for advanced battery solutions. For example, our LATP electrolyte membrane demonstrates excellent low-temperature performance, with an improvement of around 8% in low-temperature cycling at –25°C as compared to current lithium-ion battery separators, surpassing that of most separators, which typically exhibit capacity retention losses exceeding 10 to 15% under the same conditions. Our semi-solid-state electrolyte separator products have been designed to c12uu4(a)1(nallo)-858.3(igrlyt)-4-stateLitosi91.94(di

Semi-Solid-State Electrolyte Separator Technology

A semi-solid-state electrolyte separator is an important component in semi-solid-state batteries, acting as an intermediate technology between conventional liquid electrolyte batteries and solid-state batteries. Semi-solid-state electrolyte separators are produced using advanced composite coating and integrated moulding technologies. Composite coating involves applying a semi-solid electrolyte onto a separator substrate to enhance ionic conductivity and stability. Integrated moulding combines fibre frameworks with solid electrolytes, resulting in high strength, high lithium-ion conductivity and low interfacial impedance. Semi-solid-state electrolyte separators are essential for semi-solid-state batteries because they enhance safety by reducing the risk of leaks and fires associated with liquid electrolytes. They also improve energy density, leading to more powerful and longer-lasting batteries. Additionally, these separators offer better ionic conductivity and mechanical strength, which boosts overall battery performance and durability. They are cost-effective, utilising existing lithium-ion battery manufacturing processes, and serve as a crucial bridge between current lithium-ion batteries and future solid-state batteries, facilitating technological advancements.

Our semi-solid-state electrolyte separators, with a thicknesses range of 3–20 m, are engineered for high-performance EVs, drones and robots. These separators feature superior low-temperature performance, enhanced safety profiles and low interface resistance, making them ideal for advanced battery solutions. For example, our LATP electrolyte membrane demonstrates excellent low-temperature performance, with an improvement of around 8% in low-temperature cycling at –25°C as compared to current lithium-ion battery separators, surpassing that of most separators, which typically exhibit capacity retention losses exceeding 10 to 15% under the same conditions. Our semi-solid-state electrolyte separator products have been designed to c12uu4(a)1(nallo)-858.3(igrlyt)-4-stateLitosi91.94(di

Rule 3.13 of the Listing Rules

Each of the independent non-executive Directors has confirmed (i) his/her independence as regards each of the factors referred to in Rules 3.13(1) to (8) of the Listing Rules, (ii) he/she has no past or present financial or other interest in the business of the Company or its subsidiaries or any connection with any core connected person of our Company under the Listing Rules as at the Latest Practicable Date, and (iii) that there are no other factors that may affect his/her independence at the time of his/her appointments.

SENIOR MANAGEMENT

The senior management is responsible for the day-to-day management of our business. None of the members of senior management are related to our Directors or other members of senior management. The following table sets out the information of members of our senior management.

Name	Age	Position(s)	Date of joining our Group	Date of appointment as Director/ senior management[1]	Roles and responsibilities
Chen Xiufeng ( )	58	Executive Director, chairman of our Board and general manager			

JOINT COMPANY SECRETARIES

Mr. Li Sheng ( ), aged 40, was appointed as one of our joint company secretaries in June 2025 with effect from the [REDACTED]. For Mr. Li's biography, please see "— Senior Management" of this section.

Ms. Jian Xuegen ( ), aged 39, was appointed as one of our joint company secretaries in June 2025 with effect from the [REDACTED]. Ms. Jian is an assistant vice president of SWCS Corporate Services Group (Hong Kong) Limited.

Ms. Jian obtained her bachelor's degree in accounting from South China University of Technology ( ) in PRC in July 2008. She is a member of the Hong Kong Institute of Certified Public Accountants. She is also a member of the Chinese Institute of Certified Public Accountants.

MANAGEMENT AND CORPORATE GOVERNANCE

Board Committees

Our Board delegates certain responsibilities to various committees. We have established four Board committees, namely the Audit Committee, the Remuneration and Appraisal Committee, the Nomination Committee and the Strategy and Development Management Committee.

Audit Committee

We have established the Audit Committee with written terms of reference in compliance with Rule 3.21 of the Listing Rules and the Corporate Governance Code set out in Appendix C1 to the Listing Rules. The primary duties of the Audit Committee are to review and supervise the financial reporting process and internal controls system of our Group, review connected transactions, and provide advice and comments to the Board. The Audit Committee comprises three members, namely Dr. Lin Zhiwei, Mr. Tang Changjiang, and Mr. Zhu Bide, with Dr. Lin Zhiwei (being an independent non-executive Director with the appropriate professional qualifications as required under Rules 3.10(2) and 3.21 of the Listing Rules) as chairperson of the Audit Committee.

Remuneration and Appraisal Committee

We have established the Remuneration and Appraisal Committee with written terms of reference in compliance with Rule 3.25 of the Listing Rules and the Corporate Governance Code set out in Appendix C1 to the Listing Rules. The primary duties of the Remuneration and Appraisal Committee are to review and make recommendations to the Board on the terms of remuneration packages, bonuses, and other compensation payable to our Directors and other senior management. The Remuneration and Appraisal Committee comprises three members, namely Mr. Tang Changjiang, Dr. Lin Zhiwei, and Mr. Xu Liqiang, with Mr. Tang Changjiang as chairperson of the Remuneration and Appraisal Committee.

JOINT COMPANY SECRETARIES

Mr. Li Sheng ( ), aged 40, was appointed as one of our joint company secretaries in June 2025 with effect from the [REDACTED]. For Mr. Li's biography, please see "— Senior Management" of this section.

Ms. Jian Xuegen ( ), aged 39, was appointed as one of our joint company secretaries in June 2025 with effect from the [REDACTED]. Ms. Jian is an assistant vice president of SWCS Corporate Services Group (Hong Kong) Limited.

Ms. Jian obtained her bachelor's degree in accounting from South China University of Technology ( ) in PRC in July 2008. She is a member of the Hong Kong Institute of Certified Public Accountants. She is also a member of the Chinese Institute of Certified Public Accountants.

MANAGEMENT AND CORPORATE GOVERNANCE

Board Committees

Our Board delegates certain responsibilities to various committees. We have established four Board committees, namely the Audit Committee, the Remuneration and Appraisal Committee, the Nomination Committee and the Strategy and Development Management Committee.

Audit Committee

We have established the Audit Committee with written terms of reference in compliance with Rule 3.21 of the Listing Rules and the Corporate Governance Code set out in Appendix C1 to the Listing Rules. The primary duties of the Audit Committee are to review and supervise the financial reporting process and internal controls system of our Group, review connected transactions, and provide advice and comments to the Board. The Audit Committee comprises three members, namely Dr. Lin Zhiwei, Mr. Tang Changjiang, and Mr. Zhu Bide, with Dr. Lin Zhiwei (being an independent non-executive Director with the appropriate professional qualifications as required under Rules 3.10(2) and 3.21 of the Listing Rules) as chairperson of the Audit Committee.

Remuneration and Appraisal Committee

We have established the Remuneration and Appraisal Committee with written terms of reference in compliance with Rule 3.25 of the Listing Rules and the Corporate Governance Code set out in Appendix C1 to the Listing Rules. The primary duties of the Remuneration and Appraisal Committee are to review and make recommendations to the Board on the terms of remuneration packages, bonuses, and other compensation payable to our Directors and other senior management. The Remuneration and Appraisal Committee comprises three members, namely Mr. Tang Changjiang, Dr. Lin Zhiwei, and Mr. Xu Liqiang, with Mr. Tang Changjiang as chairperson of the Remuneration and Appraisal Committee.

JOINT COMPANY SECRETARIES

Mr. Li Sheng ( ), aged 40, was appointed as one of our joint company secretaries in June 2025 with effect from the [REDACTED]. For Mr. Li's biography, please see "— Senior Management" of this section.

Ms. Jian Xuegen ( ), aged 39, was appointed as one of our joint company secretaries in June 2025 with effect from the [REDACTED]. Ms. Jian is an assistant vice president of SWCS Corporate Services Group (Hong Kong) Limited.

Ms. Jian obtained her bachelor's degree in accounting from South China University of Technology ( ) in PRC in July 2008. She is a member of the Hong Kong Institute of Certified Public Accountants. She is also a member of the Chinese Institute of Certified Public Accountants.

MANAGEMENT AND CORPORATE GOVERNANCE

Board Committees

Our Board delegates certain responsibilities to various committees. We have established four Board committees, namely the Audit Committee, the Remuneration and Appraisal Committee, the Nomination Committee and the Strategy and Development Management Committee.

Audit Committee

We have established the Audit Committee with written terms of reference in compliance with Rule 3.21 of the Listing Rules and the Corporate Governance Code set out in Appendix C1 to the Listing Rules. The primary duties of the Audit Committee are to review and supervise the financial reporting process and internal controls system of our Group, review connected transactions, and provide advice and comments to the Board. The Audit Committee comprises three members, namely Dr. Lin Zhiwei, Mr. Tang Changjiang, and Mr. Zhu Bide, with Dr. Lin Zhiwei (being an independent non-executive Director with the appropriate professional qualifications as required under Rules 3.10(2) and 3.21 of the Listing Rules) as chairperson of the Audit Committee.

Remuneration and Appraisal Committee

We have established the Remuneration and Appraisal Committee with written terms of reference in compliance with Rule 3.25 of the Listing Rules and the Corporate Governance Code set out in Appendix C1 to the Listing Rules. The primary duties of the Remuneration and Appraisal Committee are to review and make recommendations to the Board on the terms of remuneration packages, bonuses, and other compensation payable to our Directors and other senior management. The Remuneration and Appraisal Committee comprises three members, namely Mr. Tang Changjiang, Dr. Lin Zhiwei, and Mr. Xu Liqiang, with Mr. Tang Changjiang as chairperson of the Remuneration and Appraisal Committee.

JOINT COMPANY SECRETARIES

Mr. Li Sheng ( ), aged 40, was appointed as one of our joint company secretaries in June 2025 with effect from the [REDACTED]. For Mr. Li's biography, please see "— Senior Management" of this section.

Ms. Jian Xuegen ( ), aged 39, was appointed as one of our joint company secretaries in June 2025 with effect from the [REDACTED]. Ms. Jian is an assistant vice president of SWCS Corporate Services Group (Hong Kong) Limited.

Ms. Jian obtained her bachelor's degree in accounting from South China University of Technology ( ) in PRC in July 2008. She is a member of the Hong Kong Institute of Certified Public Accountants. She is also a member of the Chinese Institute of Certified Public Accountants.

MANAGEMENT AND CORPORATE GOVERNANCE

Board Committees

Our Board delegates certain responsibilities to various committees. We have established four Board committees, namely the Audit Committee, the Remuneration and Appraisal Committee, the Nomination Committee and the Strategy and Development Management Committee.

Audit Committee

We have established the Audit Committee with written terms of reference in compliance with Rule 3.21 of the Listing Rules and the Corporate Governance Code set out in Appendix C1 to the Listing Rules. The primary duties of the Audit Committee are to review and supervise the financial reporting process and internal controls system of our Group, review connected transactions, and provide advice and comments to the Board. The Audit Committee comprises three members, namely Dr. Lin Zhiwei, Mr. Tang Changjiang, and Mr. Zhu Bide, with Dr. Lin Zhiwei (being an independent non-executive Director with the appropriate professional qualifications as required under Rules 3.10(2) and 3.21 of the Listing Rules) as chairperson of the Audit Committee.

Remuneration and Appraisal Committee

We have established the Remuneration and Appraisal Committee with written terms of reference in compliance with Rule 3.25 of the Listing Rules and the Corporate Governance Code set out in Appendix C1 to the Listing Rules. The primary duties of the Remuneration and Appraisal Committee are to review and make recommendations to the Board on the terms of remuneration packages, bonuses, and other compensation payable to our Directors and other senior management. The Remuneration and Appraisal Committee comprises three members, namely Mr. Tang Changjiang, Dr. Lin Zhiwei, and Mr. Xu Liqiang, with Mr. Tang Changjiang as chairperson of the Remuneration and Appraisal Committee.

JOINT COMPANY SECRETARIES

Mr. Li Sheng ( ), aged 40, was appointed as one of our joint company secretaries in June 2025 with effect from the [REDACTED]. For Mr. Li's biography, please see "— Senior Management" of this section.

Ms. Jian Xuegen ( ), aged 39, was appointed as one of our joint company secretaries in June 2025 with effect from the [REDACTED]. Ms. Jian is an assistant vice president of SWCS Corporate Services Group (Hong Kong) Limited.

Ms. Jian obtained her bachelor's degree in accounting from South China University of Technology ( ) in PRC in July 2008. She is a member of the Hong Kong Institute of Certified Public Accountants. She is also a member of the Chinese Institute of Certified Public Accountants.

MANAGEMENT AND CORPORATE GOVERNANCE

Board Committees

Our Board delegates certain responsibilities to various committees. We have established four Board committees, namely the Audit Committee, the Remuneration and Appraisal Committee, the Nomination Committee and the Strategy and Development Management Committee.

Audit Committee

We have established the Audit Committee with written terms of reference in compliance with Rule 3.21 of the Listing Rules and the Corporate Governance Code set out in Appendix C1 to the Listing Rules. The primary duties of the Audit Committee are to review and supervise the financial reporting process and internal controls system of our Group, review connected transactions, and provide advice and comments to the Board. The Audit Committee comprises three members, namely Dr. Lin Zhiwei, Mr. Tang Changjiang, and Mr. Zhu Bide, with Dr. Lin Zhiwei (being an independent non-executive Director with the appropriate professional qualifications as required under Rules 3.10(2) and 3.21 of the Listing Rules) as chairperson of the Audit Committee.

Remuneration and Appraisal Committee

We have established the Remuneration and Appraisal Committee with written terms of reference in compliance with Rule 3.25 of the Listing Rules and the Corporate Governance Code set out in Appendix C1 to the Listing Rules. The primary duties of the Remuneration and Appraisal Committee are to review and make recommendations to the Board on the terms of remuneration packages, bonuses, and other compensation payable to our Directors and other senior management. The Remuneration and Appraisal Committee comprises three members, namely Mr. Tang Changjiang, Dr. Lin Zhiwei, and Mr. Xu Liqiang, with Mr. Tang Changjiang as chairperson of the Remuneration and Appraisal Committee.

JOINT COMPANY SECRETARIES

Mr. Li Sheng ( ), aged 40, was appointed as one of our joint company secretaries in June 2025 with effect from the [REDACTED]. For Mr. Li's biography, please see "— Senior Management" of this section.

Ms. Jian Xuegen ( ), aged 39, was appointed as one of our joint company secretaries in June 2025 with effect from the [REDACTED]. Ms. Jian is an assistant vice president of SWCS Corporate Services Group (Hong Kong) Limited.

Ms. Jian obtained her bachelor's degree in accounting from South China University of Technology ( ) in PRC in July 2008. She is a member of the Hong Kong Institute of Certified Public Accountants. She is also a member of the Chinese Institute of Certified Public Accountants.

MANAGEMENT AND CORPORATE GOVERNANCE

Board Committees

Our Board delegates certain responsibilities to various committees. We have established four Board committees, namely the Audit Committee, the Remuneration and Appraisal Committee, the Nomination Committee and the Strategy and Development Management Committee.

Audit Committee

We have established the Audit Committee with written terms of reference in compliance with Rule 3.21 of the Listing Rules and the Corporate Governance Code set out in Appendix C1 to the Listing Rules. The primary duties of the Audit Committee are to review and supervise the financial reporting process and internal controls system of our Group, review connected transactions, and provide advice and comments to the Board. The Audit Committee comprises three members, namely Dr. Lin Zhiwei, Mr. Tang Changjiang, and Mr. Zhu Bide, with Dr. Lin Zhiwei (being an independent non-executive Director with the appropriate professional qualifications as required under Rules 3.10(2) and 3.21 of the Listing Rules) as chairperson of the Audit Committee.

Remuneration and Appraisal Committee

We have established the Remuneration and Appraisal Committee with written terms of reference in compliance with Rule 3.25 of the Listing Rules and the Corporate Governance Code set out in Appendix C1 to the Listing Rules. The primary duties of the Remuneration and Appraisal Committee are to review and make recommendations to the Board on the terms of remuneration packages, bonuses, and other compensation payable to our Directors and other senior management. The Remuneration and Appraisal Committee comprises three members, namely Mr. Tang Changjiang, Dr. Lin Zhiwei, and Mr. Xu Liqiang, with Mr. Tang Changjiang as chairperson of the Remuneration and Appraisal Committee.

JOINT COMPANY SECRETARIES

Mr. Li Sheng ( ), aged 40, was appointed as one of our joint company secretaries in June 2025 with effect from the [REDACTED]. For Mr. Li's biography, please see "— Senior Management" of this section.

Ms. Jian Xuegen ( ), aged 39, was appointed as one of our joint company secretaries in June 2025 with effect from the [REDACTED]. Ms. Jian is an assistant vice president of SWCS Corporate Services Group (Hong Kong) Limited.

Ms. Jian obtained her bachelor's degree in accounting from South China University of Technology ( ) in PRC in July 2008. She is a member of the Hong Kong Institute of Certified Public Accountants. She is also a member of the Chinese Institute of Certified Public Accountants.

MANAGEMENT AND CORPORATE GOVERNANCE

Board Committees

Our Board delegates certain responsibilities to various committees. We have established four Board committees, namely the Audit Committee, the Remuneration and Appraisal Committee, the Nomination Committee and the Strategy and Development Management Committee.

Audit Committee

We have established the Audit Committee with written terms of reference in compliance with Rule 3.21 of the Listing Rules and the Corporate Governance Code set out in Appendix C1 to the Listing Rules. The primary duties of the Audit Committee are to review and supervise the financial reporting process and internal controls system of our Group, review connected transactions, and provide advice and comments to the Board. The Audit Committee comprises three members, namely Dr. Lin Zhiwei, Mr. Tang Changjiang, and Mr. Zhu Bide, with Dr. Lin Zhiwei (being an independent non-executive Director with the appropriate professional qualifications as required under Rules 3.10(2) and 3.21 of the Listing Rules) as chairperson of the Audit Committee.

Remuneration and Appraisal Committee

We have established the Remuneration and Appraisal Committee with written terms of reference in compliance with Rule 3.25 of the Listing Rules and the Corporate Governance Code set out in Appendix C1 to the Listing Rules. The primary duties of the Remuneration and Appraisal Committee are to review and make recommendations to the Board on the terms of remuneration packages, bonuses, and other compensation payable to our Directors and other senior management. The Remuneration and Appraisal Committee comprises three members, namely Mr. Tang Changjiang, Dr. Lin Zhiwei, and Mr. Xu Liqiang, with Mr. Tang Changjiang as chairperson of the Remuneration and Appraisal Committee.

Nomination Committee

Board diversity

Our Company [has] adopted a board diversity policy (the "Board Diversity Policy") which sets out the approach to achieve diversity of the Board. Our Company recognises and embraces the benefits of having a diverse Board and sees increasing diversity at the Board level, including gender diversity, as an essential element in maintaining our Company's competitive advantage and enhancing its ability to attract, retain and motivate employees from the widest possible pool of available talent. Pursuant to the Board Diversity Policy, in reviewing and assessing suitable candidates to serve as a Director of our Group, the Nomination Committee will consider a number of aspects, including but not limited to gender, age, cultural and educational background, professional qualifications, skills, knowledge, and industry and regional experience. Pursuant to the Board Diversity Policy, the Nomination Committee will discuss periodically and when necessary, agree on the measurable objectives for achieving diversity, including gender diversity, on the Board and recommend them to the Board for adoption.

Our Directors have a balanced mixed of knowledge and skills, including but not limited to overall business management, engineering, and finance and accounting. They received degrees in various majors including electronic technology, materials, business administrationes, dia2.2(8c)-escoans4n

SHARE CAPITAL

This section presents certain information regarding our share capital before and upon completion of the [REDACTED].

BEFORE THE [REDACTED]

As at the Latest Practicable Date, our share capital was RMB1,345,710,639, comprising 1,345,710,639 A Shares with a nominal value of RMB1.00 each.

UPON COMPLETION OF THE [REDACTED]

Immediately following completion of the [REDACTED] (assuming that the [REDACTED] is not exercised), the share capital of our Company immediately following completion of the [REDACTED] will be as follows:

Description of Shares	Number of Shares	Approximate percentage to total share capital (%)
A Shares in issue	1,345,710,639	[REDACTED]
H Shares to be issued under the [REDACTED]	[REDACTED]	[REDACTED]
Total	[REDACTED]	100.00

Immediately following completion of the [REDACTED] (assuming the [REDACTED] is fully exercised) the share capital of our Company immediately following completion of the [REDACTED] will be as follows:

Description of Shares	Number of Shares	Approximate percentage to total share capital (%)
A Shares in issue	1,345,710,639	[REDACTED]
H Shares to be issued under the [REDACTED]	[REDACTED]	[REDACTED]
Total	[REDACTED]	100.00

SHARE CAPITAL

This section presents certain information regarding our share capital before and upon completion of the [REDACTED].

BEFORE THE [REDACTED]

As at the Latest Practicable Date, our share capital was RMB1,345,710,639, comprising 1,345,710,639 A Shares with a nominal value of RMB1.00 each.

UPON COMPLETION OF THE [REDACTED]

Immediately following completion of the [REDACTED] (assuming that the [REDACTED] is not exercised), the share capital of our Company immediately following completion of the [REDACTED] will be as follows:

Description of Shares	Number of Shares	Approximate percentage to total share capital (%)
A Shares in issue	1,345,710,639	[REDACTED]
H Shares to be issued under the [REDACTED]	[REDACTED]	[REDACTED]
Total	[REDACTED]	100.00

Immediately following completion of the [REDACTED] (assuming the [REDACTED] is fully exercised) the share capital of our Company immediately following completion of the [REDACTED] will be as follows:

Description of Shares	Number of Shares	Approximate percentage to total share capital (%)
A Shares in issue	1,345,710,639	[REDACTED]
H Shares to be issued under the [REDACTED]	[REDACTED]	[REDACTED]
Total	[REDACTED]	100.00

SHARE CAPITAL

This section presents certain information regarding our share capital before and upon completion of the [REDACTED].

BEFORE THE [REDACTED]

As at the Latest Practicable Date, our share capital was RMB1,345,710,639, comprising 1,345,710,639 A Shares with a nominal value of RMB1.00 each.

UPON COMPLETION OF THE [REDACTED]

Immediately following completion of the [REDACTED] (assuming that the [REDACTED] is not exercised), the share capital of our Company immediately following completion of the [REDACTED] will be as follows:

Description of Shares	Number of Shares	Approximate percentage to total share capital (%)
A Shares in issue	1,345,710,639	[REDACTED]
H Shares to be issued under the [REDACTED]	[REDACTED]	[REDACTED]
Total	[REDACTED]	100.00

Immediately following completion of the [REDACTED] (assuming the [REDACTED] is fully exercised) the share capital of our Company immediately following completion of the [REDACTED] will be as follows:

Description of Shares	Number of Shares	Approximate percentage to total share capital (%)
A Shares in issue	1,345,710,639	[REDACTED]
H Shares to be issued under the [REDACTED]	[REDACTED]	[REDACTED]
Total	[REDACTED]	100.00

Semi-Solid-State Electrolyte Separator Technology

A semi-solid-state electrolyte separator is an important component in semi-solid-state batteries, acting as an intermediate technology between conventional liquid electrolyte batteries and solid-state batteries. Semi-solid-state electrolyte separators are produced using advanced composite coating and integrated moulding technologies. Composite coating involves applying a semi-solid electrolyte onto a separator substrate to enhance ionic conductivity and stability. Integrated moulding combines fibre frameworks with solid electrolytes, resulting in high strength, high lithium-ion conductivity and low interfacial impedance. Semi-solid-state electrolyte separators are essential for semi-solid-state batteries because they enhance safety by reducing the risk of leaks and fires associated with liquid electrolytes. They also improve energy density, leading to more powerful and longer-lasting batteries. Additionally, these separators offer better ionic conductivity and mechanical strength, which boosts overall battery performance and durability. They are cost-effective, utilising existing lithium-ion battery manufacturing processes, and serve as a crucial bridge between current lithium-ion batteries and future solid-state batteries, facilitating technological advancements.

Our semi-solid-state electrolyte separators, with a thicknesses range of 3–20 m, are engineered for high-performance EVs, drones and robots. These separators feature superior low-temperature performance, enhanced safety profiles and low interface resistance, making them ideal for advanced battery solutions. For example, our LATP electrolyte membrane demonstrates excellent low-temperature performance, with an improvement of around 8% in low-temperature cycling at –25°C as compared to current lithium-ion battery separators, surpassing that of most separators, which typically exhibit capacity retention losses exceeding 10 to 15% under the same conditions. Our semi-solid-state electrolyte separator products have been designed to c12uu4(a)1(nallo)-858.3(igrlyt)-4-stateLitosi91.94(di

DIRECTORS

Our Board consist of the following Directors. Our Directors serve a term of three years and shall be subject to re-election upon the expiry of their respective term of office.

Name	Age	Position(s)	Date of joining our Group	Date of appointment as Director[1]	Roles and responsibilities
Chen Xiufeng ( )	58	Executive Director, chairman of our Board and general manager	September 2003	September 2008	Responsible for the strategic planning, business direction and daily operation and management of our Group
ZHANG XIAOMIN	57	Executive Director, vice general manager and chief technology officer	January 2017	December 2023	Responsible for the overall management, daily operation, and technologies of our Group
Xu Liqiang ( )	47	Executive Director	May 2021	June 2025	Responsible for the overall management and daily operation of our east China base
Zhu Bide ( )	69	Non-executive Director	November 2021	November 2021	Responsible for providing professional opinion and judgement

DIRECTORS

Our Board consist of the following Directors. Our Directors serve a term of three years and shall be subject to re-election upon the expiry of their respective term of office.

Name	Age	Position(s)	Date of joining our Group	Date of appointment as Director[1]	Roles and responsibilities
Chen Xiufeng ( )	58	Executive Director, chairman of our Board and general manager	September 2003	September 2008	Responsible for the strategic planning, business direction and daily operation and management of our Group
ZHANG XIAOMIN	57	Executive Director, vice general manager and chief technology officer	January 2017	December 2023	Responsible for the overall management, daily operation, and technologies of our Group
Xu Liqiang ( )	47	Executive Director	May 2021	June 2025	Responsible for the overall management and daily operation of our east China base
Zhu Bide ( )	69	Non-executive Director	November 2021	November 2021	Responsible for providing professional opinion and judgement

Notes:

(1) The dates of the appointment refer to the appointment of the relevant positions in our Company after its conversion into a joint stock company with limited liability in September 2008. For the details of the conversion, please see "History and Corporate Structure — Incorporation of our Company and Conversion into a Joint Stock Company"

(2) Mr. Leung Shu Sun Sunny shall replace one of the c

Semi-Solid-State Electrolyte Separator Technology

A semi-solid-state electrolyte separator is an important component in semi-solid-state batteries, acting as an intermediate technology between conventional liquid electrolyte batteries and solid-state batteries. Semi-solid-state electrolyte separators are produced using advanced composite coating and integrated moulding technologies. Composite coating involves applying a semi-solid electrolyte onto a separator substrate to enhance ionic conductivity and stability. Integrated moulding combines fibre frameworks with solid electrolytes, resulting in high strength, high lithium-ion conductivity and low interfacial impedance. Semi-solid-state electrolyte separators are essential for semi-solid-state batteries because they enhance safety by reducing the risk of leaks and fires associated with liquid electrolytes. They also improve energy density, leading to more powerful and longer-lasting batteries. Additionally, these separators offer better ionic conductivity and mechanical strength, which boosts overall battery performance and durability. They are cost-effective, utilising existing lithium-ion battery manufacturing processes, and serve as a crucial bridge between current lithium-ion batteries and future solid-state batteries, facilitating technological advancements.

Our semi-solid-state electrolyte separators, with a thicknesses range of 3–20 m, are engineered for high-performance EVs, drones and robots. These separators feature superior low-temperature performance, enhanced safety profiles and low interface resistance, making them ideal for advanced battery solutions. For example, our LATP electrolyte membrane demonstrates excellent low-temperature performance, with an improvement of around 8% in low-temperature cycling at –25°C as compared to current lithium-ion battery separators, surpassing that of most separators, which typically exhibit capacity retention losses exceeding 10 to 15% under the same conditions. Our semi-solid-state electrolyte separator products have been designed to c12uu4(a)1(nallo)-858.3(igrlyt)-4-stateLitosi91.94(dino)

Semi-Solid-State Electrolyte Separator Technology

A semi-solid-state electrolyte separator is an important component in semi-solid-state batteries, acting as an intermediate technology between conventional liquid electrolyte batteries and solid-state batteries. Semi-solid-state electrolyte separators are produced using advanced composite coating and integrated moulding technologies. Composite coating involves applying a semi-solid electrolyte onto a separator substrate to enhance ionic conductivity and stability. Integrated moulding combines fibre frameworks with solid electrolytes, resulting in high strength, high lithium-ion conductivity and low interfacial impedance. Semi-solid-state electrolyte separators are essential for semi-solid-state batteries because they enhance safety by reducing the risk of leaks and fires associated with liquid electrolytes. They also improve energy density, leading to more powerful and longer-lasting batteries. Additionally, these separators offer better ionic conductivity and mechanical strength, which boosts overall battery performance and durability. They are cost-effective, utilising existing lithium-ion battery manufacturing processes, and serve as a crucial bridge between current lithium-ion batteries and future solid-state batteries, facilitating technological advancements.

Our semi-solid-state electrolyte separators, with a thicknesses range of 3–20 m, are engineered for high-performance EVs, drones and robots. These separators feature superior low-temperature performance, enhanced safety profiles and low interface resistance, making them ideal for advanced battery solutions. For example, our LATP electrolyte membrane demonstrates excellent low-temperature performance, with an improvement of around 8% in low-temperature cycling at –25°C as compared to current lithium-ion battery separators, surpassing that of most separators, which typically exhibit capacity retention losses exceeding 10 to 15% under the same conditions. Our semi-solid-state electrolyte separator products have been designed to c12uu4(a)1(nallo)-858.3(igrlyt)-4-stateLitosi91.94(dino)

Semi-Solid-State Electrolyte Separator Technology

A semi-solid-state electrolyte separator is an important component in semi-solid-state batteries, acting as an intermediate technology between conventional liquid electrolyte batteries and solid-state batteries. Semi-solid-state electrolyte separators are produced using advanced composite coating and integrated moulding technologies. Composite coating involves applying a semi-solid electrolyte onto a separator substrate to enhance ionic conductivity and stability. Integrated moulding combines fibre frameworks with solid electrolytes, resulting in high strength, high lithium-ion conductivity and low interfacial impedance. Semi-solid-state electrolyte separators are essential for semi-solid-state batteries because they enhance safety by reducing the risk of leaks and fires associated with liquid electrolytes. They also improve energy density, leading to more powerful and longer-lasting batteries. Additionally, these separators offer better ionic conductivity and mechanical strength, which boosts overall battery performance and durability. They are cost-effective, utilising existing lithium-ion battery manufacturing processes, and serve as a crucial bridge between current lithium-ion batteries and future solid-state batteries, facilitating technological advancements.

Our semi-solid-state electrolyte separators, with a thicknesses range of 3–20 m, are engineered for high-performance EVs, drones and robots. These separators feature superior low-temperature performance, enhanced safety profiles and low interface resistance, making them ideal for advanced battery solutions. For example, our LATP electrolyte membrane demonstrates excellent low-temperature performance, with an improvement of around 8% in low-temperature cycling at –25°C as compared to current lithium-ion battery separators, surpassing that of most separators, which typically exhibit capacity retention losses exceeding 10 to 15% under the same conditions. Our semi-solid-state electrolyte separator products have been designed to c12uu4(a)1(nallo)-858.3(igrlyt)-4-stateLitosi91.94(dino)

COMPLIANCE ADVISOR

We have appointed Goldlink Capital (Corporate Finance) Limited as our compliance advisor (the "Compliance Advisor") pursuant to Rule 3A.19 of the Listing Rules. The Compliance Advisor will provide us with guidance and advice as to compliance with the requirements under the Listing Rules and applicable laws. Pursuant to Rule 3A.23 of the Listing Rules, the Compliance Advisor will advise our Company, among others, in the following circumstances:

- before the publication of any regulatory announcement, circular, or financial report;
- where a transaction, which might be a notifiable or connected transaction, is contemplated, including share issues and share repurchases;
- where we propose to use the [REDACTED] of the [REDACTED] in a manner different from that detailed in this document or where the business activities, development, or results of our Group deviate from any forecast, estimate, or other information in this document; and
- where the Stock Exchange makes an inquiry to our Company regarding unusual movements in the price or [REDACTED] of our listed securities or any other matters in accordance with Rule 13.10 of the Listing Rules.

The term of appointment of the Compliance Advisor shall commence on the [REDACTED] Date and is expected to end on the date on which we comply with Rule

solid-state electrolyte membrane — poor contact between solid electrolytes and electrodes, leading to slow kinetics, and chemo-mechanical issues that cause contact loss or interphase formation, reducing efficiency. Solid-state electrolyte membranes play a critical role in the advancement of solid-state battery technologies, offering a range of important benefits. By replacing flammable liquid electrolytes, they greatly improve safety, effectively reducing the risks of leakage and fire. Their design allows for the use of lithium metal anodes, which deliver significantly higher energy densities than conventional graphite anodes. This contributes to the development of lighter, more powerful batteries. In addition, these membranes provide superior mechanical and thermal stability, resulting in batteries that are both longer lasting and more reliable over time. Solid-state batteries equipped with these membranes can achieve higher power densities and support faster charging, significantly boosting overall performance. The adoption of solid-state technology also enables innovative battery configurations, including flexible and bipolar designs, which are essential for future applications in consumer electronics, transportation vehicles and energy storage.

In the battery industry, solid-state electrolyte membranes mainly face two major technical challenges. Firstly, the production process is highly demanding, making large-scale manufacturing difficult and resulting in extremely high costs. Secondly, achieving thin membranes is technically challenging, and it is generally difficult to reduce the thickness of solid-state electrolyte membranes to below 30 μm. By using integrated forming technology for production, we believe our electrolyte membrane overcomes the difficulties of mass-production, enabling large-scale manufacturing for future applications and advancing the rapid commercialisation of solid-state batteries. Furthermore, this integrated forming technology allows for further membrane thinning, enhancing the energy density of solid-state batteries.

We design solid-state electrolyte membranes with a thicknesses range of 7–37 μm, targeting high-end digital and power battery sectors. Our proprietary integrated moulding technology combines a robust fibre framework with cutting-edge solid electrolytes, resulting in membranes offering high mechanical strength, impressive lithium-ion conductivity and low interfacial impedance. For instance, we have developed an integrated, self-developed solid-state electrolyte membrane features a tensile strength of

RANKING

Upon the completion of the [REDACTED], our Shares will consist of A Shares and H Shares. A Shares and H Shares are all ordinary Shares in the share capital of our Company and are regarded as the same class of Shares under the Articles of Association.

Apart from certain qualified domestic institutional investors in the PRC, the qualified PRC investors under the Shanghai-Hong Kong Stock Connect or the Shenzhen-Hong Kong Stock Connect and other persons who are entitled to hold our H Shares pursuant to relevant PRC laws and regulations or upon approvals of any competent authorities, H Shares generally cannot be [REDACTED] for by or [REDACTED] between legal or natural persons of the PRC.

A Shares and H Shares shall carry the same rights in all other respects and, in particular, will rank equally for dividends or distributions declared, paid or made. All dividends in respect of our H Shares are to be paid by us in Hong Kong dollars whereas all dividends in respect of our A Shares are to be paid by us in Renminbi. In addition to cash, dividends may also be distributed in the form of Shares. Holders of our H Shares will receive share dividends in the form of H Shares, and holders of our A Shares will receive share dividends in the form of A Shares.

NO CONVERSION OF OUR A SHARES INTO H SHARES FOR [REDACTED] AND [REDACTED] ON THE HONG KONG STOCK EXCHANGE

Our A Shares and our H Shares are generally neither interchangeable nor fungible, and the market prices of our A Shares and our H Shares may be different after the [REDACTED]. The Guidelines on Application for "Full Circulation" of Domestic Unlisted Shares of H-share Companies (H
announced by the CSRC are not applicable to companies dual listed in the PRC and on the Hong Kong Stock Exchange. As at the Latest Practicable Date, there were no relevant rules or guidelines from the CSRC providing that A Shareholders may convert A shares held by them into H shares for [REDACTED] and [REDACTED] on the Hong Kong Stock Exchange.

APPROVAL FROM HOLDERS OF A SHARES REGARDING THE [REDACTED]

Approval from holders of A Shares is required for our Company to issue H Shares and seek the listing of H Shares on the Hong Kong Stock Exchange. Such approval was obtained by us at the shareholders' general meeting of our Company held on 21 May 2025 and is subject to the following major conditions:

(i) Size of the [REDACTED]: The proposed number of H Shares to be [REDACTED] shall not exceed approximately [REDACTED]% of the total issued share capital enlarged by the H Shares to be issued pursuant to the [REDACTED] (before the exercise of the [REDACTED]). The number of H Shares to be issued pursuant to the full exercise of the [REDACTED] shall not exceed [REDACTED]% of the total number of H Shares to be [REDACTED] initially under the [REDACTED].

RANKING

Upon the completion of the [REDACTED], our Shares will consist of A Shares and H Shares. A Shares and H Shares are all ordinary Shares in the share capital of our Company and are regarded as the same class of Shares under the Articles of Association.

Apart from certain qualified domestic institutional investors in the PRC, the qualified PRC investors under the Shanghai-Hong Kong Stock Connect or the Shenzhen-Hong Kong Stock Connect and other persons who are entitled to hold our H Shares pursuant to relevant PRC laws and regulations or upon approvals of any competent authorities, H Shares generally cannot be [REDACTED] for by or [REDACTED] between legal or natural persons of the PRC.

A Shares and H Shares shall carry the same rights in all other respects and, in particular, will rank equally for dividends or distributions declared, paid or made. All dividends in respect of our H Shares are to be paid by us in Hong Kong dollars whereas all dividends in respect of our A Shares are to be paid by us in Renminbi. In addition to cash, dividends may also be distributed in the form of Shares. Holders of our H Shares will receive share dividends in the form of H Shares, and holders of our A Shares will receive share dividends in the form of A Shares.

NO CONVERSION OF OUR A SHARES INTO H SHARES FOR [REDACTED] AND [REDACTED] ON THE HONG KONG STOCK EXCHANGE

Our A Shares and our H Shares are generally neither interchangeable nor fungible, and the market prices of our A Shares and our H Shares may be different after the [REDACTED]. The Guidelines on Application for "Full Circulation" of Domestic Unlisted Shares of H-share Companies (H
announced by the CSRC are not applicable to companies dual listed in the PRC and on the Hong Kong Stock Exchange. As at the Latest Practicable Date, there were no relevant rules or guidelines from the CSRC providing that A Shareholders may convert A shares held by them into H shares for [REDACTED] and [REDACTED] on the Hong Kong Stock Exchange.

APPROVAL FROM HOLDERS OF A SHARES REGARDING THE [REDACTED]

Approval from holders of A Shares is required for our Company to issue H Shares and seek the listing of H Shares on the Hong Kong Stock Exchange. Such approval was obtained by us at the shareholders' general meeting of our Company held on 21 May 2025 and is subject to the following major conditions:

(i) Size of the [REDACTED]: The proposed number of H Shares to be [REDACTED] shall not exceed approximately [REDACTED]% of the total issued share capital enlarged by the H Shares to be issued pursuant to the [REDACTED] (before the exercise of the [REDACTED]). The number of H Shares to be issued pursuant to the full exercise of the [REDACTED] shall not exceed [REDACTED]% of the total number of H Shares to be [REDACTED] initially under the [REDACTED].

RANKING

Upon the completion of the [REDACTED], our Shares will consist of A Shares and H Shares. A Shares and H Shares are all ordinary Shares in the share capital of our Company and are regarded as the same class of Shares under the Articles of Association.

Apart from certain qualified domestic institutional investors in the PRC, the qualified PRC investors under the Shanghai-Hong Kong Stock Connect or the Shenzhen-Hong Kong Stock Connect and other persons who are entitled to hold our H Shares pursuant to relevant PRC laws and regulations or upon approvals of any competent authorities, H Shares generally cannot be [REDACTED] for by or [REDACTED] between legal or natural persons of the PRC.

A Shares and H Shares shall carry the same rights in all other respects and, in particular, will rank equally for dividends or distributions declared, paid or made. All dividends in respect of our H Shares are to be paid by us in Hong Kong dollars whereas all dividends in respect of our A Shares are to be paid by us in Renminbi. In addition to cash, dividends may also be distributed in the form of Shares. Holders of our H Shares will receive share dividends in the form of H Shares, and holders of our A Shares will receive share dividends in the form of A Shares.

NO CONVERSION OF OUR A SHARES INTO H SHARES FOR [REDACTED] AND [REDACTED] ON THE HONG KONG STOCK EXCHANGE

Our A Shares and our H Shares are generally neither interchangeable nor fungible, and the market prices of our A Shares and our H Shares may be different after the [REDACTED]. The Guidelines on Application for "Full Circulation" of Domestic Unlisted Shares of H-share Companies (H
announced by the CSRC are not applicable to companies dual listed in the PRC and on the Hong Kong Stock Exchange. As at the Latest Practicable Date, there were no relevant rules or guidelines from the CSRC providing that A Shareholders may convert A shares held by them into H shares for [REDACTED] and [REDACTED] on the Hong Kong Stock Exchange.

APPROVAL FROM HOLDERS OF A SHARES REGARDING THE [REDACTED]

Approval from holders of A Shares is required for our Company to issue H Shares and seek the listing of H Shares on the Hong Kong Stock Exchange. Such approval was obtained by us at the shareholders' general meeting of our Company held on 21 May 2025 and is subject to the following major conditions:

(i) Size of the [REDACTED]: The proposed number of H Shares to be [REDACTED] shall not exceed approximately [REDACTED]% of the total issued share capital enlarged by the H Shares to be issued pursuant to the [REDACTED] (before the exercise of the [REDACTED]). The number of H Shares to be issued pursuant to the full exercise of the [REDACTED] shall not exceed [REDACTED]% of the total number of H Shares to be [REDACTED] initially under the [REDACTED].

RANKING

Upon the completion of the [REDACTED], our Shares will consist of A Shares and H Shares. A Shares and H Shares are all ordinary Shares in the share capital of our Company and are regarded as the same class of Shares under the Articles of Association.

Apart from certain qualified domestic institutional investors in the PRC, the qualified PRC investors under the Shanghai-Hong Kong Stock Connect or the Shenzhen-Hong Kong Stock Connect and other persons who are entitled to hold our H Shares pursuant to relevant PRC laws and regulations or upon approvals of any competent authorities, H Shares generally cannot be [REDACTED] for by or [REDACTED] between legal or natural persons of the PRC.

A Shares and H Shares shall carry the same rights in all other respects and, in particular, will rank equally for dividends or distributions declared, paid or made. All dividends in respect of our H Shares are to be paid by us in Hong Kong dollars whereas all dividends in respect of our A Shares are to be paid by us in Renminbi. In addition to cash, dividends may also be distributed in the form of Shares. Holders of our H Shares will receive share dividends in the form of H Shares, and holders of our A Shares will receive share dividends in the form of A Shares.

NO CONVERSION OF OUR A SHARES INTO H SHARES FOR [REDACTED] AND [REDACTED] ON THE HONG KONG STOCK EXCHANGE

Our A Shares and our H Shares are generally neither interchangeable nor fungible, and the market prices of our A Shares and our H Shares may be different after the [REDACTED]. The Guidelines on Application for "Full Circulation" of Domestic Unlisted Shares of H-share Companies (H
announced by the CSRC are not applicable to companies dual listed in the PRC and on the Hong Kong Stock Exchange. As at the Latest Practicable Date, there were no relevant rules or guidelines from the CSRC providing that A Shareholders may convert A shares held by them into H shares for [REDACTED] and [REDACTED] on the Hong Kong Stock Exchange.

APPROVAL FROM HOLDERS OF A SHARES REGARDING THE [REDACTED]

Approval from holders of A Shares is required for our Company to issue H Shares and seek the listing of H Shares on the Hong Kong Stock Exchange. Such approval was obtained by us at the shareholders' general meeting of our Company held on 21 May 2025 and is subject to the following major conditions:

(i) Size of the [REDACTED]: The proposed number of H Shares to be [REDACTED] shall not exceed approximately [REDACTED]% of the total issued share capital enlarged by the H Shares to be issued pursuant to the [REDACTED] (before the exercise of the [REDACTED]). The number of H Shares to be issued pursuant to the full exercise of the [REDACTED] shall not exceed [REDACTED]% of the total number of H Shares to be [REDACTED] initially under the [REDACTED].

RANKING

Upon the completion of the [REDACTED], our Shares will consist of A Shares and H Shares. A Shares and H Shares are all ordinary Shares in the share capital of our Company and are regarded as the same class of Shares under the Articles of Association.

Apart from certain qualified domestic institutional investors in the PRC, the qualified PRC investors under the Shanghai-Hong Kong Stock Connect or the Shenzhen-Hong Kong Stock Connect and other persons who are entitled to hold our H Shares pursuant to relevant PRC laws and regulations or upon approvals of any competent authorities, H Shares generally cannot be [REDACTED] for by or [REDACTED] between legal or natural persons of the PRC.

A Shares and H Shares shall carry the same rights in all other respects and, in particular, will rank equally for dividends or distributions declared, paid or made. All dividends in respect of our H Shares are to be paid by us in Hong Kong dollars whereas all dividends in respect of our A Shares are to be paid by us in Renminbi. In addition to cash, dividends may also be distributed in the form of Shares. Holders of our H Shares will receive share dividends in the form of H Shares, and holders of our A Shares will receive share dividends in the form of A Shares.

NO CONVERSION OF OUR A SHARES INTO H SHARES FOR [REDACTED] AND [REDACTED] ON THE HONG KONG STOCK EXCHANGE

Our A Shares and our H Shares are generally neither interchangeable nor fungible, and the market prices of our A Shares and our H Shares may be different after the [REDACTED]. The Guidelines on Application for "Full Circulation" of Domestic Unlisted Shares of H-share Companies (H
announced by the CSRC are not applicable to companies dual listed in the PRC and on the Hong Kong Stock Exchange. As at the Latest Practicable Date, there were no relevant rules or guidelines from the CSRC providing that A Shareholders may convert A shares held by them into H shares for [REDACTED] and [REDACTED] on the Hong Kong Stock Exchange.

APPROVAL FROM HOLDERS OF A SHARES REGARDING THE [REDACTED]

Approval from holders of A Shares is required for our Company to issue H Shares and seek the listing of H Shares on the Hong Kong Stock Exchange. Such approval was obtained by us at the shareholders' general meeting of our Company held on 21 May 2025 and is subject to the following major conditions:

(i) Size of the [REDACTED]: The proposed number of H Shares to be [REDACTED] shall not exceed approximately [REDACTED]% of the total issued share capital enlarged by the H Shares to be issued pursuant to the [REDACTED] (before the exercise of the [REDACTED]). The number of H Shares to be issued pursuant to the full exercise of the [REDACTED] shall not exceed [REDACTED]% of the total number of H Shares to be [REDACTED] initially under the [REDACTED].

[REDACTED] expenses we expect to incur would consist of (i) approximately HK$[REDACTED] [REDACTED] related expenses and fees (including [REDACTED], SFC transaction levy, Stock Exchange trading fee and AFRC transaction levy), and (ii) approximately HK$[REDACTED] non-[REDACTED]-related expenses and fees (including (a) fees and expenses of legal advisors and accountants of approximately HK$[REDACTED] and (b) other fees and expenses of HK$[REDACTED]).

The [REDACTED] expenses above are the latest practicable estimate for reference only, and the actual amount may differ from this estimate.

DISCLOSURE REQUIRED UNDER THE LISTING RULES

The Directors have confirmed that as at the Latest Practicable Date, they were not aware of any circumstances that would give rise to a disclosure requirement under Rules 13.13 to Rules 13.19 of the Listing Rules.

UNAUDITED [REDACTED] ADJUSTED NET TANGIBLE ASSETS

Please refer to "Unaudited [REDACTED] Financial Information" set out in Appendix IIA to this document.

RECENT DEVELOPMENT AND NO MATERIAL ADVERSE CHANGE

For the eleven months ended 30 November 2025, we recorded an increase in revenue

[REDACTED] expenses we expect to incur would consist of (i) approximately HK$[REDACTED] [REDACTED] related expenses and fees (including [REDACTED], SFC transaction levy, Stock Exchange trading fee and AFRC transaction levy), and (ii) approximately HK$[REDACTED] non-[REDACTED]-related expenses and fees (including (a) fees and expenses of legal advisors and accountants of approximately HK$[REDACTED] and (b) other fees and expenses of HK$[REDACTED]).

The [REDACTED] expenses above are the latest practicable estimate for reference only, and the actual amount may differ from this estimate.

DISCLOSURE REQUIRED UNDER THE LISTING RULES

The Directors have confirmed that as at the Latest Practicable Date, they were not aware of any circumstances that would give rise to a disclosure requirement under Rules 13.13 to Rules 13.19 of the Listing Rules.

UNAUDITED [REDACTED] ADJUSTED NET TANGIBLE ASSETS

Please refer to "Unaudited [REDACTED] Financial Information" set out in Appendix IIA to this document.

RECENT DEVELOPMENT AND NO MATERIAL ADVERSE CHANGE

For the eleven months ended 30 November 2025, we recorded an increase in revenue

[REDACTED] expenses we expect to incur would consist of (i) approximately HK$[REDACTED] [REDACTED] related expenses and fees (including [REDACTED], SFC transaction levy, Stock Exchange trading fee and AFRC transaction levy), and (ii) approximately HK$[REDACTED] non-[REDACTED]-related expenses and fees (including (a) fees and expenses of legal advisors and accountants of approximately HK$[REDACTED] and (b) other fees and expenses of HK$[REDACTED]).

The [REDACTED] expenses above are the latest practicable estimate for reference only, and the actual amount may differ from this estimate.

DISCLOSURE REQUIRED UNDER THE LISTING RULES

The Directors have confirmed that as at the Latest Practicable Date, they were not aware of any circumstances that would give rise to a disclosure requirement under Rules 13.13 to Rules 13.19 of the Listing Rules.

UNAUDITED [REDACTED] ADJUSTED NET TANGIBLE ASSETS

Please refer to "Unaudited [REDACTED] Financial Information" set out in Appendix IIA to this document.

RECENT DEVELOPMENT AND NO MATERIAL ADVERSE CHANGE

For the eleven months ended 30 November 2025, we recorded an increase in revenue

[REDACTED] expenses we expect to incur would consist of (i) approximately HK$[REDACTED] [REDACTED] related expenses and fees (including [REDACTED], SFC transaction levy, Stock Exchange trading fee and AFRC transaction levy), and (ii) approximately HK$[REDACTED] non-[REDACTED]-related expenses and fees (including (a) fees and expenses of legal advisors and accountants of approximately HK$[REDACTED] and (b) other fees and expenses of HK$[REDACTED]).

The [REDACTED] expenses above are the latest practicable estimate for reference only, and the actual amount may differ from this estimate.

DISCLOSURE REQUIRED UNDER THE LISTING RULES

The Directors have confirmed that as at the Latest Practicable Date, they were not aware of any circumstances that would give rise to a disclosure requirement under Rules 13.13 to Rules 13.19 of the Listing Rules.

UNAUDITED [REDACTED] ADJUSTED NET TANGIBLE ASSETS

Please refer to "Unaudited [REDACTED] Financial Information" set out in Appendix IIA to this document.

RECENT DEVELOPMENT AND NO MATERIAL ADVERSE CHANGE

For the eleven months ended 30 November 2025, we recorded an increase in revenue

Mr. Wang obtained his bachelor's degree in accounting from Harbin Institute of Technology ( ) in July 2005.

Mr. Li Sheng ( ), aged 40, has been our board secretary since September 2024 and joint company secretary since June 2025. He is responsible for information disclosure and investor relations management of our Group.

Prior to joining our Group, Mr. Li served as multiple titles at Industrial Securities Co., Ltd. ( ), a company listed on the Shanghai Stock Exchange under the stock code 601377, from 2011 to 2021, including sales manager of institutional client department, sales manager of financial and economic research institute, head of Guangzhou business of sales trading headquarters. He served as the head of South China group of institutional client headquarters at Shenwan Hongyuan Securities Co., Ltd. ( ) from September 2021 to September 2024.

Mr. Li obtained his bachelor's degree in environmental engineering from Nanjing University in PRC in June 2006 and his master's degree in finance from Sun Yat-sen University ( ) in PRC in June 2010.

FURTHER INFORMATION ABOUT PROF. CHEN

During his tenure with our Group, Prof. Chen, our executive Director, chairman of the Board and a Single Largest Shareholder, received certain regulatory and warning decisions (the "Decisions") from the Shenzhen Stock Exchange and the CSRC (collectively, the "Incidents"), listed as follows:

(i) Delayed notification of share pledge by Prof. Chen (March 2018) Prof. Chen pledged 17.7 million shares (about 9.22% of the Company's total share capital) on 6 March 2018, but only notified the Company of this pledge on 23 March 2018. This delay was due to his inadvertent oversight of the relevant reporting requirements. The Shenzhen Stock Exchange required Prof. Chen to be more attentive, correct the breach, and prevent recurrence.

(ii) Unreported related party transaction due to unnotified directorship (November 2018) Mr. Wu Feng, then an independent non-executive director of the Company, was appointed as an independent non-executive director of Tianjin Lishen Battery Co., Ltd. ( ), ("Tianjin Lishen") (a customer), making Tianjin Lishen a related party from December 2017. Wu Feng did not notify the Board, and the Board only approved and disclosed the related party transaction after business of RMB29.2 million had already occurred in October 2025 and Mr. Wu Feng resigned in the same month due to personal matters. The Board (including Prof. Chen) was required to address the oversight and prevent similar issues.

(iii) Delayed shareholding change disclosure by controlling shareholders (December 2020/January 2021) Prof. Chen and another controlling shareholder reduced their collective Company stake from about 26.49% to 20.81% (a decrease exceeding the 5% disclosure threshold) between August 2019 and November 2020, but delayed

JOINT COMPANY SECRETARIES

Mr. Li Sheng ( ), aged 40, was appointed as one of our joint company secretaries in June 2025 with effect from the [REDACTED]. For Mr. Li's biography, please see "— Senior Management" of this section.

Ms. Jian Xuegen ( ), aged 39, was appointed as one of our joint company secretaries in June 2025 with effect from the [REDACTED]. Ms. Jian is an assistant vice president of SWCS Corporate Services Group (Hong Kong) Limited.

Ms. Jian obtained her bachelor's degree in accounting from South China University of Technology ( ) in PRC in July 2008. She is a member of the Hong Kong Institute of Certified Public Accountants. She is also a member of the Chinese Institute of Certified Public Accountants.

MANAGEMENT AND CORPORATE GOVERNANCE

Board Committees

Our Board delegates certain responsibilities to various committees. We have established four Board committees, namely the Audit Committee, the Remuneration and Appraisal Committee, the Nomination Committee and the Strategy and Development Management Committee.

Audit Committee

We have established the Audit Committee with written terms of reference in compliance with Rule 3.21 of the Listing Rules and the Corporate Governance Code set out in Appendix C1 to the Listing Rules. The primary duties of the Audit Committee are to review and supervise the financial reporting process and internal controls system of our Group, review connected transactions, and provide advice and comments to the Board. The Audit Committee comprises three members, namely Dr. Lin Zhiwei, Mr. Tang Changjiang, and Mr. Zhu Bide, with Dr. Lin Zhiwei (being an independent non-executive Director with the appropriate professional qualifications as required under Rules 3.10(2) and 3.21 of the Listing Rules) as chairperson of the Audit Committee.

Remuneration and Appraisal Committee

We have established the Remuneration and Appraisal Committee with written terms of reference in compliance with Rule 3.25 of the Listing Rules and the Corporate Governance Code set out in Appendix C1 to the Listing Rules. The primary duties of the Remuneration and Appraisal Committee are to review and make recommendations to the Board on the terms of remuneration packages, bonuses, and other compensation payable to our Directors and other senior management. The Remuneration and Appraisal Committee comprises three members, namely Mr. Tang Changjiang, Dr. Lin Zhiwei, and Mr. Xu Liqiang, with Mr. Tang Changjiang as chairperson of the Remuneration and Appraisal Committee.

The following is the text of a report set out on pages I-1 to I-[ ], received from the Company's reporting accountants, Rongcheng (Hong Kong) CPA Limited, Certified Public Accountants, Hong Kong, for the purpose of incorporation in this document. It is prepared and addressed to the directors of the Company and to the Sole Sponsor pursuant to the requirements of HKSIR 200 Accountants' Reports on Historical Financial Information in Investment Circulars issued by the Hong Kong Institute of Certified Public Accountants.

容诚 | RCHK

ACCOUNTANTS' REPORT ON HISTORICAL FINANCIAL INFORMATION TO THE DIRECTORS OF SHENZHEN SENIOR TEC HNOLOGY MATERIAL CO., LTD. AND CHINA SECURITIES (INTERNATIONA L) CORPORATE FINANCE COMPANY LIMITED

Introduction

We report on the historical financial information of Shenzhen Senior Technology Material Co., Ltd. (the "Company") and its subsidiaries (together, the "Group") set out on pages I-[4] to I-[ ], which comprises the consolidated statements of financial position of

Reporting accountants' responsibility

Our responsibility is to express an opinion on the Historical Financial Information and to report our opinion to you. We conducted our work in accordance with Hong Kong Standard on Investment Circular Reporting Engagements 200, "Accountants' Reports on Historical Financial Information in Investment Circulars" issued by the Hong Kong Institute of Certified Public Accountants ("HKICPA"). This standard requires that we comply with ethical standards and plan and perform our work to obtain reasonable assurance about whether the Historical Financial Information is free from material misstatement.

Our work involved performing procedures to obtain evidence about the amounts and disclosures in the Historical Financial Information. The procedures selected depend on the reporting accountants' judgement, including the assessment of risks of material misstatement of the Historical Financial Information, whether due to fraud or error. In making those risk assessments, the reporting accountants consider internal control relevant to the entity's preparation of Historical Financial Information that gives a true and fair view in accordance with the basis of presentation and preparation set out in Note 2 to the Historical Financial Information in order to design procedures that are appropriate in the circumstances, but not for the purpose of expressing an opinion on the effectiveness of the entity's internal control. Our work also included evaluating the appropriateness of

Period Comparative Financial Information based on our review. We conducted our review in accordance with International Standard on Review Engagements 2410, “Review of Interim Financial Information Performed by the Independent Auditor of the Entity” issued by the International Auditing and Assurance Standards Board (“IAASB”). A review consists of making inquiries, primarily of persons responsible for financial and accounting matters, and applying analytical and other review procedures. A review is substantially less in scope than an audit conducted in accordance with International Standards on Auditing

I. HISTORICAL FINANCIAL INFORMATION OF THE GROUP

Preparation of Historical Financial Information

Set out below is the Historical Financial Information which forms an integral part of this accountants' report.

The consolidated financial statements of the Group for the Track Record Period, on which the Historical Financial Information is based, have been prepared in accordance with the accounting policies which conform with IFRS Accounting Standards issued by International Accounting Standards Board ("IASB") and were audited by Rongcheng (Hong Kong) CPA Limited in accordance with International Standards on Auditing issued by IAASB ("Underlying Financial Statements").

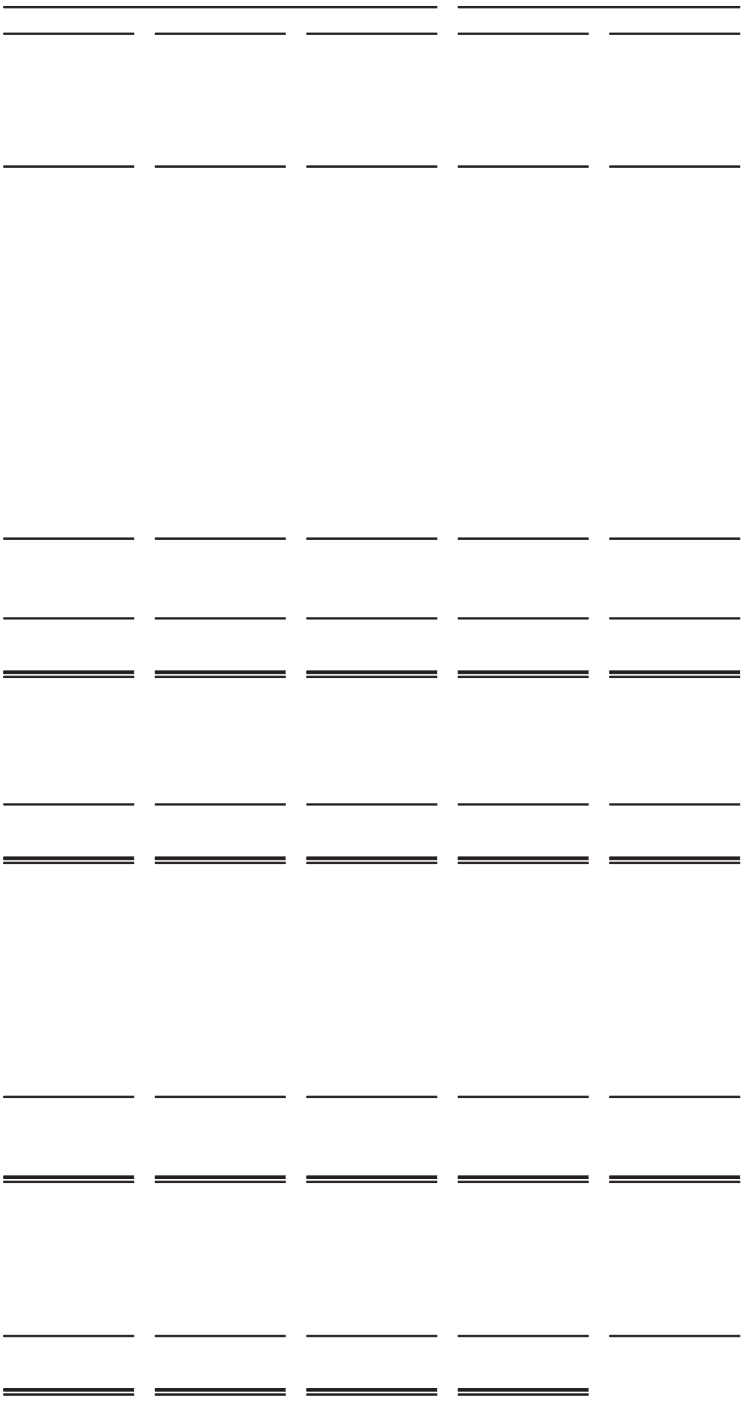

CONSOLIDATED STATEMENTS OF FINANCIAL POSITION

	Notes	As at 31 December 2022 RMB'000	2023 RMB'000	2024 RMB'000	As at 30 September 2025 RMB'000
ASSETS AND LIABILITIES					
Non-current assets					
Property, plant and equipment	14	5,773,657	8,570,012	13,009,505	16,727,173
Right-of-use assets	15(a)	347,001	591,537	850,810	901,045
Intangible assets	16	6,378	5,276	7,844	19,745
Investments in associates and joint venture	17	64,969	5,118	49,589	11,616
Financial assets at fair value through profit or loss	18(a)	300	64,212	76,982	79,065
Financial assets at fair value through other comprehensive income	19	—	—	—	18,816
Time deposits	24	—	—	51,562	50,979
Prepayments, other receivables and other assets	22	691,873	1,279,387	1,533,439	464,607
Deferred income tax assets	26	34,511	11,393	23,723	67,968
		6,918,689	10,526,935	15,603,454	18,341,014
Current assets					
Inventories	20	283,702	396,864	518,063	709,531
Trade and notes receivables	21	492,299	1,773,249	2,376,056	2,558,106
Prepayments, other receivables and other assets	22	219,449	419,819	357,903	476,368
Amounts due from related parties	38(c)	—	—	6	481
Prepaid income tax		13,154	5,023	20,483	3,621
Financial assets at fair value through profit or loss	18(a)	1,555,872	870,638	299,367	236,473
Financial assets at fair value through other comprehensive income	19	87,503	79,585	292,318	306,162
Restricted bank deposits	23	153,777	145,402	485,496	551,559
Time deposits	24	1,682,786	1,983,538	541,635	540,113
Cash and cash equivalents	25	2,793,953	1,744,409	2,650,754	1,951,489
		6,782,495	7,418,527	7,542,081	7,333,903
Current liabilities					
Trade and notes payables	27	540,104	478,454	532,281	671,392
Financial liabilities at fair value through profit or loss	18(b)	—	—	—	15,860
Contract liabilities		2,349	3,577	4,333	1,387
Other payables and accruals	28	668,029	899,443	1,382,915	1,428,559
Amounts due to related parties	38(c)	—	119	635	2,139
Borrowings	29	1,079,663	2,598,947	4,105,067	5,687,855
Lease liabilities	15(b)	3,510	3,862	18,646	71,476
Income tax payable		35,934	37,770	17,145	35,147
		2,329,589	4,022,172	6,061,022	7,913,815
Net current assets		4,452,906	3,396,355	1,481,059	(579,912)
Total assets less current liabilities		11,371,595	13,923,290	17,084,513	17,761,102

	Notes	As at 31 December 2022 RMB'000	2023 RMB'000	2024 RMB'000	As at 30 September 2025 RMB'000
Non-current liabilities					
Other payables and accruals	28	334,397	476,520	498,058	481,386
Borrowings	29	2,370,378	3,411,636	6,278,987	6,902,852
Lease liabilities	15(b)	38,261	37,134	299,858	291,261
Deferred income tax liabilities	26	45,460	39,223	36,488	24,352
		2,788,496	3,964,513	7,113,391	7,699,851
Net assets		8,583,099	9,958,777	9,971,122	10,061,251
EQUITY					
Share capital and treasury shares	30	1,180,240	1,255,985	1,280,192	997,366
Reserves	32	7,255,122	8,537,690	8,518,946	8,865,793
Equity attributable to owners of the Company		8,435,362	9,793,675	9,799,138	9,863,159
Non-controlling interests		147,737	165,102	171,984	198,092
Total equity		8,583,099	9,958,777	9,971,122	10,061,251

STATEMENTS OF FINANCIAL POSITION OF THE COMPANY

	Notes	As at 31 December 2022 RMB'000	2023 RMB'000	2024 RMB'000	As at 30 September 2025 RMB'000
ASSETS AND LIABILITIES					
Non-current assets					
Property, plant and equipment	14	732,779	838,139	842,682	851,427
Right-of-use assets	15(a)	59,549	57,811	61,998	58,166
Intangible assets	16	4,109	3,289	2,598	4,492
Investments in associates and joint venture	17	64,969	5,118	49,589	11,616
Investments in subsidiaries	36	3,579,916	4,502,627	4,783,627	8,433,200
Financial assets at fair value through profit or loss	18(a)	—	63,912	76,682	78,765
Financial assets at fair value through other comprehensive income	19	—	—	—	18,816
Time deposits	24	—	—	20,864	20,979
Prepayments, other receivables and other assets	22	36,923	195,397	175,953	78,700
Deferred income tax assets	26	19,456	—	2,850	22,003
		4,497,701	5,666,293	6,016,843	9,578,164
Current assets					
Inventories	20	56,565	77,818	82,864	64,136
Trade and notes receivables	21	937,402	1,164,844	1,660,434	1,538,768
Amounts due from subsidiaries and related parties	38(c)	773,257	1,160,218	4,241,550	3,493,593
Prepayments, other receivables and other asset	22	80,574	18,438	28,807	49,887
Prepaid income tax		13,154	5,023	4,480	—
Financial assets at fair value through profit or loss	18(a)	1,443,765	810,280	229,367	—
Financial assets at fair value through other comprehensive income	19	61,466	55,007	266,001	270,441
Restricted bank deposits	23	95,644	81,927	437,654	457,247
Time deposits	24	1,200,343	1,781,762	50,797	135,713
Cash and cash equivalents	25	627,372	1,029,618	995,122	656,123
		5,289,542	6,184,935	7,997,076	6,665,908
Current liabilities					
Trade and notes payables	27	232,168	225,970	89,250	157,463
Financial liabilities at fair value through profit or loss	18(b)	—	—	—	15,860
Contract liabilities		2,021	3,273	3,901	338
Amounts due to subsidiaries and related parties	38(c)	1,510,877	2,474,270	4,404,438	5,694,117
Other payables and accruals	28	149,941	268,345	114,026	266,262
Borrowings	29	107,094	351,425	702,489	1,120,446
Lease liabilities	15(b)	44	—	2,655	2,728
		2,002,145	3,323,283	5,316,759	7,257,214
Net current assets		3,287,397	2,861,652	2,680,317	(591,306)
Total assets less current liabilities		7,785,098	8,527,945	8,697,160	8,986,858

	Notes	As at 31 December 2022 RMB'000	2023 RMB'000	2024 RMB'000	As at 30 September 2025 RMB'000
Non-current liabilities					
Other payables and accruals	28	45,613	48,762	56,520	52,489
Borrowings	29	410,438	310,000	469,000	1,114,000
Lease liabilities	15(b)	—	—	4,166	2,111
Deferred income tax liabilities	26	535	—	—	—
		456,586	358,762	529,686	1,168,600
Net assets		7,328,512	8,169,183	8,167,474	7,818,258
EQUITY					
Share capital and treasury shares	30	1,180,240	1,255,985	1,280,192	997,366
Reserves	32	6,148,272	6,913,198	6,887,282	6,820,892
Total equity		7,328,512	8,169,183	8,167,474	7,818,258



	Attributable to owners of the Company								
	Share capital	Treasury shares reserve	Capital reserve	Other comprehensive income reserve	Statutory reserve	Retained earnings	Sub-total	Non-controlling interests	Total equity
	RMB'000 Note 30	RMB'000 Note 30	RMB'000 (Note (a))	RMB'000 (Note (b))	RMB'000 (Note (c))	RMB'000	RMB'000	RMB'000	RMB'000
As at 1 January 2024	1,345,107	(89,122)	6,438,249	58,571	109,494	1,931,376	9,793,675	165,102	9,958,777

CONSOLIDATED STATEMENTS OF CASH FLOWS

	Year ended 31 December			Nine months ended 30 September	
	2022	2023	2024	2024	2025
	RMB'000	RMB'000	RMB'000	RMB'000 (unaudited)	RMB'000
Operating activities					
Profit before income tax	847,929	717,048	407,019	401,767	127,478
Adjustments for:					
Share of results of associates and joint venture, net	1,622	1,940	1,349	2,018	(75)
Depreciation of property, plant and equipment (Note 14)	367,022	445,559	598,297	410,851	617,272
Depreciation of right-of-use assets (Note 15)	3,214	4,485	9,534	6,920	11,359
Amortisation of intangible assets (Note 16)	1,452	1,397	1,489	1,053	2,159
Investment income from financial assets at fair value through profit or loss (Note 7)	(9,356)	(2375965-26892.03.8(()3.18,99(16-.03931.1(83,95268965-2689			

	Year ended 31 December			Nine months ended 30 September	
	2022	2023	2024	2024	2025
	RMB'000	RMB'000	RMB'000	RMB'000 (unaudited)	RMB'000
Investing activities					
Payment and prepayment for purchase of property, plant and equipment	(2,346,873)	(3,950,726)	(4,548,570)	(3,088,863)	(2,886,554)
Proceeds from disposal of property, plant and equipment	900	49	16,710	1	1,416
Purchase of intangible assets	(474)	(293)	(4,058)	(2,846)	(14,051)

	Notes	Year ended 31 December 2022 RMB'000	2023 RMB'000	2024 RMB'000	Nine months ended 30 September 2024 RMB'000 (unaudited)	2025 RMB'000
Financing activities						
Capital injection by a non-controlling shareholder		4,000	—	—	—	—
Proceeds from issue of shares		3,478,623	824,362	—	—	22,593
Proceeds from issue of restricted shares		47,269	10,801	—	—	—
Repurchase of restricted shares		(425)	(535)	(25,660)	(570)	(12,456)
Proceeds from bank borrowings	35	2,576,836	1,927,016	4,442,584	3,718,533	2,507,631
Repayment of bank borrowings	35	(1,288,639)	(489,176)	(1,259,051)	(763,806)	(1,379,131)
Interest paid	35	(96,090)	(154,279)	(245,492)	(155,061)	(171,008)
Proceeds from other borrowings	35	630,716	1,528,786	2,593,090	1,642,532	1,553,353
Repayment of other borrowings	35	(795,300)	(414,671)	(1,418,330)	(1,535,932)	(591,106)
Principal portion of lease payments	35	(3,873)	(2,402)	(7,494)	(3,714)	(17,666)
Dividends paid to the owners of the Company		(38,420)	(127,931)	(295,382)	(295,382)	(66,595)
Payment on repurchase of shares		(50,775)	—	—	—	(299,983)
Payment of [REDACTED] expenses		[REDACTED]	[REDACTED]	[REDACTED]	[REDACTED]	[REDACTED]
Receipt from maturity of pledged bank deposits		295,889	448,428	141,940	83,461	798,571
Placement of pledged bank deposits		(130,615)	(469,077)	(895,189)	(473,422)	(864,634)
Net cash flows generated from financing activities		4,628,206	3,081,322	3,23.691	031,016	2,216,639 1,466,762
Net increase/(decrease) in cash and cash equivalents		624,664	423,885	955,225	1,744,614	(681,239)
Cash and cash equivalents at beginning of year/period		651,226	1,293,953	1,744,409	1,744,409	2,650,754
Effect of foreign exchange rate changes, net		18,063	26,571	(48,880)	(21,666)	(18,026)
Cash and cash equivalents at end of year/period	25	1,293,953	1,744,409	2,23.691	650,754	3,467,357 1,951,489

II. NOTES TO THE HISTORICAL FINANCIAL INFORMATION

1. GENERAL INFORMATION

The Company was a limited liability company incorporated in the PRC on 17 September 2003 and changed to a joint stock limited company on 3 September 2008. The Company's A shares are listed on Shenzhen Stock Exchange on 1 November 2016. The address of the Company's registered office and its principal place of business is Gongming office, Guangming District, Shenzhen City, Guangdong Province, Tianyuan Road North, the PRC.

During the Track Record Period, the Company and its subsidiaries are principally engaged in the research and development, production and sales of lithium-ion battery separators applied in the field of new energy, new materials and new energy vehicles.

The Company has a diversified shareholder structure. Among them, as a natural person shareholder, Chen Xiufeng holds 12.70% of the company's shares and is the largest individual shareholder of the company. In this Historical Financial Information, certain English n

Non-controlling interests in the results and equity of subsidiaries are shown separately in the consolidated statements of comprehensive income, consolidated statements of changes in equity and consolidated balance sheets, respectively.

In the Company's statement of financial position, subsidiaries are carried at cost less any impairment loss unless the subsidiary is held for sale or included in a disposal group. Cost is adjusted to reflect changes in consideration arising from contingent consideration amendments. Cost also includes direct attributable costs of investment.

Foreign currency translation

The Historical Financial Information is presented in RMB, which is also the functional currency of the Company. Each entity in the Group determines its own functional currency and items included in the financial statements of each entity are measured using that functional currency.

In the individual financial statements of the consolidated entities, foreign currency transactions are translated into the functional currency of the individual entity using the exchange rates prevailing at the dates of the transactions. At the end of the reporting period, monetary assets and liabilities denominated in foreign currencies are translated at the foreign exchange rates ruling at that date. Foreign exchange gains and losses resulting from the settlement of such transactions and from there translation of monetary assets and liabilities at the end of the reporting period are recognised in profit or loss.

Non-monetary items carried at fair value that are denominated in foreign currencies are retranslated at the rates prevailing on the date when the fair value was determined.ref

Depreciation is recognised so as to write off the cost of assets other than construction in progress less their residual values using the straight-line basis over their estimated useful lives as follow:

Properties and buildings	20–40 years
Machinery	5–10 years
Transportation equipment	10 years
Administrative equipment	5–10 years
Experiments and other equipment	5–10 years

The land purchased by the Group overseas with permanent property rights is recognised as freehold land and is not depreciated.

Estimates of residual value and useful life are reviewed, and adjusted if appropriate, at the end of each year/period for the Track Record Period.

Gain or loss arising on retirement or disposal is determined as the difference between the sales proceeds and the carrying amount of the asset and is recognised in profit or loss.

Subsequent costs are included in the asset's carrying amount or recognised as a separate asset, as appropriate, only when it is probable that future economic benefits associated with the item will flow to the Group and the cost of the item can be measured reliably. The carrying amount of the replaced part is derecognised. All other costs, such as repairs and maintenance, are charged to profit or loss during the financial period in which they are incurred.

Right-of-use assets

Accounting policies of right-of-use assets (other than prepaid lease payments) are set out in "Leases" below.

Prepaid land lease payments (which meet the definition of right-of-use assets) represent the upfront payment for long-term land lease in which the payment can be reliably measured. It is stated at cost less accumulated depreciation and any accumulated impairment losses. Depreciation is calculated on a straight-line basis over the term of the lease/right-of-use except where an alternative basis is more representative of the time pattern of benefits to be derived by the Group from use of assets.

Intangible assets

Acquired intangible assets are recognised initially at cost. After initial recognition, intangible assets with finite useful lives are carried at cost less accumulated amortisation and any accumulated impairment losses. Amortisation for intangible assets with finite useful lives is provided on straight-line basis over their estimated useful lives. Amortisation commences when the intangible assets are available for use. The useful lives are as follows:

Software	5 years

The assets' amortisation methods and useful lives are reviewed, and adjusted if appropriate, at the end of each year/period for the Track Record Period.

Intangible assets are tested for impairment as described in "Impairment of non-financial assets" below.

Research and development

Costs associated with research activities are expensed in profit or loss as they incur. Costs that are directly attributable to development activities are recognised as intangible assets provided they meet all of the following recognition requirements:

(i) demonstration of technical feasibility of the prospective product for internal use or sale;

(ii) there is intention to complete the intangible asset and use or sell it;

(iii) the Group's ability to use or sell the intangible asset is demonstrated;

(iv) the intangible asset will generate probable economic benefits through internal use or sale;

(v) sufficient technical, financial and other resources are available for completion; and

(vi) the expenditure attributable to the intangible asset can be reliably measured.

Direct costs include employee costs incurred on development activities along with an appropriate portion of relevant overheads. The costs of development of internally generated software, products or know-how that meet the above recognition criteria are recognised as intangible assets. They are subject to the same subsequent measurement method as acquired intangible assets.

All other development costs are expensed as incurred.

Financial instruments

Recognition and derecognition

Financial assets and financial liabilities are recognised when the Group becomes a party to the contractual provisions of the financial instrument.

Financial assets are derecognised when the contractual rights to the cash flows from the financial asset expire, or when the financial asset and substantially all of its risks and rewards are transferred. A financial liability is derecognised when it is extinguished, discharged, cancelled or expires.

Financial assets

Classification and initial measurement of financial assets

Except for those trade receivables that do not contain a significant financing component and are measured at the transaction price in accordance with IFRS 15 "Revenue from Contracts with Customers", all financial assets are initially measured at fair value, in case of a financial asset not at fair value through profit or loss ("FVTPL"), plus transaction costs that are directly attributable to the acquisition of the financial asset. Transaction costs of financial assets carried at FVTPL are expensed in profit or loss.

Financial assets, other than those designated and effective as hedging instruments, are classified into the following categories:

— amortised cost;

— FVTPL; or

— Fair value through other comprehensive income ("FVTOCI").

The classification is determined by both:

— the Group's business model for managing the financial asset; and

— the contractual cash flow characteristics of the financial asset.

Subsequent measurement of financial assets

The equity instruments at FVTOCI are not subject to impairment assessment. The cumulative gain or loss in "other comprehensive income reserve" will not be reclassified to profit or loss upon disposal of the equity investments and will be transferred to retained earnings.

Dividends from these investments in equity instruments are recognised in profit or loss when the Group's right to receive the dividends is established, unless the dividends clearly represent a recovery of part of the cost of the investment. Dividends are included in "other income" in profit or loss.

Impairment of financial assets

IFRS 9's impairment requirements use forward-looking information to recognise ECL — the "ECL model". Instruments within the scope included cash and bank deposits, trade receivables, notes receivables, and other financial assets measured at amortised cost.

The Group considers a broader range of information when assessing credit risk and measuring ECL, including past events, current conditions, reasonable and supportable forecasts that affect the expected collectability of the future cash flows of the instrument.

In applying this general model approach, a distinction is made between:

Stage 1 — Financial instruments for which credit risk has not increased significantly since initial recognition and for which the loss allowance is measured at an amount equal to 12-month ECLs.

Stage 2 — Financial instruments for which credit risk has increased significantly since initial recognition but that are not credit-impaired financial assets and for which the loss allowance is measured at an amount equal to lifetime ECLs.

Stage 3 — Financial assets that are credit-impaired at the reporting date (but that are not purchased or originated credit impaired) and for which the loss allowance is measured at an amount equal to lifetime ECLs.

Measurement of the ECL is determined by a probability-weighted estimate of credit losses over the expected life of the financial instrument.

Cash and bank deposits

Cash and bank deposits are considered to have low credit risk because the counterparties are banks and have a low risk of default, and have a strong capacity to meet its contractual cash flow obligations in the near term. Cash and bank deposits are also subject to the impairment requirements of IFRS 9, while the identified credit loss was immaterial.

Trade receivables and notes receivables

For trade and notes receivables, the Group applies a simplified approach in calculating ECL and recognises a loss allowance based on lifetime ECLs at the end of each year/period for the Track Record Period. These are the expected shortfalls in contractual cash flows, considering the potential for default at any point during the life of the financial assets. In calculating the ECL, the Group has established a provision matrix that is based on its historical credit loss experience and external indicators, adjusted for forward-looking factors specific to the debtors and the economic environment.

To measure the ECL, except for trade and notes receivables with significant outstanding balances which are assessed individually, the remaining trade and notes receivables have been grouped based on shared credit risk characteristics.

For notes receivables measured at FVTOCI, the Group assumes that the credit risk on notes receivables measured at FVTOCI has not increased significantly since initial recognition if the notes receivables measured at FVTOCI is determined to have low credit risk at the end of each reporting period. Notes receivables measured at FVTOCI is determined to have low credit risk if it has a low risk of default, the borrower has strong capacity to meet its contractual cash flow obligations in the near term and adverse changes in economic and business conditions in the longer term may, but will not necessarily, reduce the ability of the borrower to fulfil its contractual cash flow obligations.

Other receivables and other financial assets measured at amortised cost

The Group measures the loss allowance for other receivables equal to 12-month ECL, unless when there has been a significant increase in credit risk since initial recognition, in which case the Group recognises lifetime ECL. The assessment of whether lifetime ECL should be recognised is based on significant increase in the likelihood of risk of default occurring since initial recognition.

In assessing whether the credit risk has increased significantly since initial recognition, the Group compares the risk of a default occurring on the financial assets at the end of each year/period for the Track Record Period with the risk of default occurring on the financial assets at the date of initial recognition. In making this assessment, the Group considers both quantitative and qualitative information that is reasonable and supportable, including historical experience and forward-looking information that is available without undue cost or effort.

In particular, the following information is taken into account when assessing whether credit risk has increased significantly:

— an actual or expected significant deterioration in the financial instrument's external (if available) or internal credit rating,

— significant deterioration in external market indicators of credit risk, e.g., a significant increase in the credit spread and the credit default swap prices for the debtor;

— existing or forecast adverse changes in regulatory, business, financial, economic conditions, or technological environment that are expected to cause a significant decrease in the debtor's ability to meet its debt obligations; and

— an actual or expected significant deterioration in the operating results of the debtor.

For internal credit risk management, the Group considers an event of default occurs when information developed internally or obtained from external sources indicates that the debtor is unlikely to pay its creditors, including the Group, in full (without taking into account any collateral held by the Group).

Detailed analysis of the ECL assessment of trade and notes receivables, contract assets, other financial assets measured at amortised cost and trade and notes receivables measured at FVTOCI are set out in Note 41.

Financial liabilities

Classification and measurement of financial liabilities

Borrowings

Borrowings are recognised initially at fair value, net of transaction costs. Borrowings are subsequently stated at amortised cost; any difference between the proceeds (net of transaction costs) and the redemption value is recognised in profit or loss over the period of the borrowings using the effective interest method.

Borrowings are classified as current liabilities unless the Group has an unconditional right to defer settlement of the liability for at least 12 months after the end of the reporting period.

Trade and notes payables, other payables and accruals

Trade and notes payables, other payables and accruals are recognised initially at their fair value and subsequently measured at amortised cost, using the effective interest method.

Inventories

Inventories are carried at the lower of cost and net realisable value. Net realisable value is the estimated selling price in the ordinary course of business less the estimated cost of completion and applicable selling expenses. Cost is determined using the weighted average basis, and in the case of semi-finished goods and finished goods, comprises direct materials, direct labour and an appropriate proportion of overheads.

Cash and cash equivalents

Cash and cash equivalents include cash at bank and in hand, demand deposits with banks and short term highly liquid investments with original maturities of three months or less that are readily convertible into known amounts of cash and which are subject to an insignificant risk of changes in value.

Bank balances for which use by the Group is subject to third party contractual restrictions are included as part of cash unless the restrictions result in a bank balance no longer meeting the definition of cash. Contractual restrictions affecting use of bank balances are disclosed in Note 25.

Leases

Definition of a lease and the Group as a lessee

At inception of a contract, the Group considers whether a contract is, or contains a lease. A lease is defined as "a contract, or part of a contract, that conveys the right to use an identified asset (the underlying asset) for a period of time in exchange for consideration". To apply this definition, the Group assesses whether the contract meets three key evaluations which are whether:

- the contract contains an identified asset, which is either explicitly identified in the contract or implicitly specified by being identified at the time the asset is made available to the Group;

- the Group has the right to obtain substantially all of the economic benefits from use of the identified asset throughout the period of use, considering its rights within the defined scope of the contract; and

- the Group has the right to direct the use of the identified asset throughout the period of use. The Group assesses whether it has the right to direct 'how and for what purpose' the asset is used throughout the period of use.

Measurement and recognition of leases as a lessee

At lease commencement date, the Group recognises a right-of-use asset and a lease liability on the consolidated statements of financial position. The right-of-use asset is measur

For lease modification that is not accounted for as a separate lease, the Group remeasures the lease liability based on the lease term of the modified lease by discounting the revised lease payments using a revised discount rate at the effective date of modification.

When the lease is remeasured, the corresponding adjustment is reflected in the right-of-use asset, or profit or loss if the right-of-use asset is already reduced to zero.

The Group has elected to account for short-term leases and leases of low-value assets using the practical expedients. Instead of recognising a right-of-use asset and lease liability, the payments in relation to these leases are recognised as an expense in profit or loss on a straight-line basis over the lease term. Short-term leases are leases with a lease term of 12 months or less.

Provisions and contingent liabilities

Provisions are recognised when the Group has a present obligation (legal or constructive) as a result of a past event, and it is probable that an outflow of economic benefits will be required to settle the obligation and a reliable estimate of the amount of the obligation can be made. Where the time value of money is material, provisions are stated at the present value of the expenditure expected to settle the obligation.

All provisions are reviewed at the end of each year/period for the Track Record Period and adjusted to reflect the current best estimate.

Where it is not probable that an outflow of economic benefits will be required, or the amount cannot be estimated reliably, the obligation is disclosed as a contingent liability, unless the probability of outflow of economic benefits is remote. Possible obligations, whose existence will only be confirmed by the occurrence or non-occurrence of one or more future uncertain events not wholly within the control of the Group, are also disclosed as contingent liabilities unless the probability of outflow of economic benefits is remote.

An onerous contract exists when the Group has a contract under which the unavoidable costs of meeting the obligations under the contract exceed the economic benefits expected to be received from the contract. Provisions for onerous contracts are measured at the present value of the lower of the expected cost of terminating the contract and the net cost of fulfilling the contract (which includes both incremental costs and an allocation of other costs that relate directly to fulfilling that contract).

Contingent liabilities assumed in a business combination which are present obligations at the date of acquisition are initially recognised at fair value, provided the fair value can be reliably measured. After the initial recognition at fair value, such contingent liabilities are recognised at the higher of the amount initially recognised, less accumulated amortisation where appropriate, and the amount that would be recognised in a comparable provision as described above. Contingent liabilities assumed in a business combination that cannot be reliably fair valued or were not present obligations at the date of acquisition are disclosed as per above.

Share capital

Share capital are classified as equity. Share capital is recognised at the amount of consideration of shares issued, after deducting any transaction costs associated with the issue of shares (net of any related income tax benefit) to the extent they are incremental costs directly attributable to the equity transaction.

Impairment of non-financial assets

The following assets are subject to impairment testing:

. Intangible assets;

. Property, plant and equipment;

. Right-of-use assets; and

. The Company's investments in subsidiaries, associates and joint venture.

Assets with indefinite useful life or those not yet available for use are tested for impairment at least annually, irrespective of whether ther

Retirement benefits

Pension scheme

Retirement benefits to employees are provided through defined contribution plans. The employees of the Group's subsidiaries which operate in the PRC are required to participate in a central pension scheme operated by the local municipal government. This subsidiary is required to contribute a certain percentage of its payroll costs to the central pension scheme. Contributions are recognised as an expense in profit or loss as employees render services during the year. The Group's obligations under these plans are limited to the fixed percentage contributions payable.

Housing funds, medical insurances and other social insuranh3Gesme

Borrowing costs

Borrowing costs incurred, net of any investment income earned on the temporary investment of the specific borrowings, for the acquisition, construction or production of any qualifying asset are capitalised during the period of time that is required to complete and prepare the asset for its intended use. A qualifying asset is an asset which necessarily takes a substantial period of time to get ready for its intended use or sale. Other borrowing costs are expensed when incurred.

Borrowing costs are capitalised as part of the cost of a qualifying asset when expenditure for the asset is being incurred, borrowing costs are being incurred and activities that are necessary to prepare the asset for its intended use or sale are being undertaken. Capitalisation of borrowing costs ceases when substantially all the activities necessary to prepare the qualifying asset for its intended use or sale are complete.

Accounting for income taxes

Income tax comprises current tax and deferred income tax.

Current income tax assets and/or liabilities comprise those obligations to, or claims from, fiscal authorities relating to the current or prior reporting period, that are unpaid at the end of the reporting period. They are calculated according to the tax rates and tax laws applicable to the fiscal periods to which they relate, based on the taxable profit for the year. All changes to current tax assets or liabilities are recognised as a component of tax expense in profit or loss.

When different tax rates apply to different levels of taxable income, deferred income tax assets and

Inventory provision

Inventories are stated at the lower of cost and net realisable value. The net realisable value is the estimated selling price in the ordinary course of business less the estimated costs of completion and the estimated costs necessary to make the sale. Even though the management of the Group has made the best estimate about the inventory write-down loss predicted to occur and provided allowance for write-down, the write-down assessment may still be significantly changed due to the change of market situation.

Fair value of financial assets at FVTPL

The fair value of financial assets that are not tr

Leases — Estimating the incremental borrowing rate

The Group cannot readily determine the interest rate implicit in a lease, and therefore, it uses an incremental borrowing rate ("IBR") to measure lease liabilities. The IBR is the rate of interest that the Group would have to pay to borrow over a similar term, and with a similar security, the funds necessary to obtain an asset of a similar value to the right-of-use asset in a similar economic environment. The IBR therefore reflects what the Group "would have to pay", which requires estimation when no observable rates are available (such as for subsidiaries that do not enter into financing transactions) or when it needs to be adjusted to reflect the terms and conditions of the lease. The Group estimates the IBR using observable inputs (such as market interest rates) when available and is required to make certain entity-specific estimates (such as the subsidiary's stand-alone credit rating).

5. REVENUE AND SEGMENT INFORMATION

The Group's principal activities are disclosed in Note 1 to the Historical Financial Information.

Geographical information

Information about major customers

Revenue derived from customers individually **o**ntributed over 10% of the Group's revenue during the Track Record Period is as follows:

	Year ended 31 December			Nine months ended 30 September	
	2022	2023	2024	2024	2025
	RMB'000	RMB'000	RMB'000	RMB'000 (unaudited)	RMB'000
Customer A	847,668	795,237	460,389	375,212	367,419
Customer B	387,124	N/A*	. 0 511 3.7(a)6.7(bout),2 l -4		

7. OTHER GAINS AND (LOSSES), NET

	Year ended 31 December			Nine months ended 30 September	
	2022	2023	2024	2024	2025
	RMB'000	RMB'000	RMB'000	RMB'000 (unaudited)	RMB'000
Investment income of financial assets at FVTPL	9,356	38,720	20,175	18,916	83,950
Net foreign exchange gains/(losses)	22,051	1,019	27,138	6,866	(27,451)
Net fair value gains/(losses) from changes in fair value of financial assets and liabilities at FVTPL	5,672	3,636	(9,666)	(7,482)	(8,818)
Net gains/(losses) on disposal of property, plant and equipment	500	(850)	(2,248)	(425)	(13,446)
Settlement expenses for litigation (Note)	—	(107,657)	—	—	—
Others	648	1,820	1,079	1,360	(7,310)
	38,227	(63,312)	36,478	19,235	26,925

Note:

During September 2019 to November 2023, the Group and its subsidiaries received litigations against them in the United States ("US") and the United Kingdom ("UK") by a competitor for alleged infringement, illegal acquisition of trade secrets, and unfair competition. The competitor requested the US and UK courts to grant injunction for the Group from selling related products in the relevant markets and to determine appropriate compensation based on the judgement. During this period and as at 31 December 2022, the directors of the Company belie

8. EXPENSES BY NATURE

Expenses included in cost of sales, research and development expenses, selling expenses and general and administrative expenses are analysed as follows:

	Year ended 31 December			Nine months ended 30 September	
	2022	2023	2024	2024	2025
	RMB'000	RMB'000	RMB'000	RMB'000 (unaudited)	RMB'000
Raw materials consumed and sales/ consumption of finished goods and semi-finished goods	869,286	803,792	1,363,975	1,014,113	1,096,470
Depreciation of property, plant and equipment (Note 14)	367,022	445,559	598,297	410,851	617,272
Depreciation of right-of-use assets (Note 15)	3,214	4,485	9,534	6,920	11,359
Amortisation of intangible assets (Note 16)	1,452	1,397	1,489	1,053	2,159
Net impairment losses (reversed)/ recognised on inventories	(2,411)	19,142	3,242	(10,808)	5,471
Employee benefit expenses	386,083	467,325	514,137	365,394	503,408
Share-based payment expenses (Note 9)	34,904	4,811	11,982	12,541	41,936
Energy and fuel costs	189,053	236,767	318,246	229,934	325,480
Logistics fees	40,907	49,944	75,166	33,454	36,637
Official and travel expenses	26,671	53,093	52,394	29,793	35,140
Tax and surcharges	19,793	28,256	34,964	23,133	29,000
Legal and professional fees	67,562	116,643	34,388	30,608	19,564
[REDACTED] expenses	[REDACTED]	[REDACTED]	[REDACTED]	[REDACTED]	[REDACTED]
Auditor's remuneration	1,500	1,800	1,800	1,350	1,350
Others	51,166	70,503	102,217	90,330	90,213
	2,056,202	2,303,517	3,121,831	2,238,666	2,816,438

9. EMPLOYEE BENEFIT EXPENSES

	Year ended 31 December			Nine months ended 30 September	
	2022	2023	2024	2024	2025
	RMB'000	RMB'000	RMB'000	RMB'000 (unaudited)	RMB'000
Salaries, allowances, discretionary bonuses and benefits in kind	433,850	549,432	637,713	452,374	530,670
Retirement scheme contributions	16,992	29,866	38,404	27,441	32,715
Share-based compensation expenses	34,904	4,811	11,982	12,541	41,936
	485,746	584,109	688,099	492,356	605,321

(a) Directors', 5executive'

	Fees	Salaries, allowances, discretionary bonuses and benefits in kind	Retirement scheme contributions	Share-based compensation expenses	Total
	RMB'000	RMB'000	RMB'000	RMB'000	RMB'000
Year ended 31 December 2024					
Executive directors					
Prof. Chen Xiufeng (Chief executive)	—	2,442	52	—	2,494
Mr. Zhu Bide	—	80	—	—	80
Dr. ZHANG XIAOMIN	—	1,272	19	—	1,291
Mr. Liu Rui	—	1,424	29	475	1,928
Independent non-executive directors					
Dr. Ju Xuecheng (Note (g))	53	—	—	—	53
Dr. Tang Changjiang (Note (i))	20	—	—	—	20
Dr. Lin Zhiwei	80	—	—	—	80
Ms. Sun Zhenzhen (Note (f))	80	—	—	—	80
Supervisors					
Mr. Ding Zhiqiang	—	639	—	—	639
Mr. Li Bo	—	309	21	—	330
Ms. He Yanli	—	387	13	—	400
	233	6,553	134	475	7,395
Nine months ended 30 September 2024 (unaudited)					
Executive directors					
Prof. Chen Xiufeng (Chief executive)	—	1,690	39	—	1,729
Mr. Zhu Bide	—	60	—	—	60
Dr. ZHANG XIAOMIN	—	810	18	—	828
Mr. Liu Rui	—	1,232	27	426	1,685
Independent non-executive directors					
Dr. Ju Xuecheng (Note (g))	53	—	—	—	53
Dr. Lin Zhiwei	60	—	—	—	60
Ms. Sun Zhenzhen	60	—	—	—	60
Dr. Tang Changjiang (Note (h))	1	—	—	—	1
Supervisors					
Mr. Ding Zhiqiang	—	388	—	—	388
Mr. Li Bo	—	193	16	—	209
Ms. He Yanli	—	176	10	—	186
	174	4,549	110	426	5,259

	Fees	Salaries, allowances, discretionary bonuses and benefits in kind	Retirement scheme contributions	Share-based compensation expenses	Total
	RMB'000	RMB'000	RMB'000	RMB'000	RMB'000
Nine months ended 30 September 2025					
Executive directors					
Prof. Chen Xiufeng (Chief executive)	—	1,150	42	—	1,192
Mr. Zhu Bide	—	173	—	—	173
Dr. ZHANG XIAOMIN	—	818	15	—	833
Mr. Liu Rui (Note (d))	—	318	15	445	778
Dr. Xu Mr. Liu Ruin.. —	318 —5(3)i15	445	4166J 7(8)]TJ -22.9488 -1.2519 TD204.6(78)-417348 Tc [(D		

(b) Five highest paid individuals

During the years ended 31 December 2022, 2023 and 2024 and six months ended 30 September 2024 and 2025, the five highest paid individuals included 2, 1, 2 and 1, 1 directors, respectively, whose emoluments are reflected in Note 9(b) above. The aggregate emoluments payable to the remaining 3, 4, 3 and 4, 4 individuals during the years ended 31 December 2022, 2023 and 2024 and nine months ended 30 September 2024 and 2025 are as follows:

	Year ended 31 December			Nine months ended 30 September	
	2022	2023	2024	2024	2025
	RMB'000	RMB'000	RMB'000	RMB'000 (unaudited)	RMB'000
Salaries, allowances, discretionary bonuses and benefits in kind	7,077	7,845	4,636	3,570	3,663
Retirement scheme contributions	65	57	109	85	121
Share-based compensation expenses	2,946	132	4,386	1,609	14,839
	10,088	8,034	9,131	5,264	18,623

The discretionary bonus is determined by reference to individual performance of the employees and approved by the management of the Group. The emoluments of the remaining highest paid individuals fell within the following bands:

	Year ended 31 December			Nine months ended 30 September	
	2022	2023	2024	2024	2025
				(unaudited)	
HK$1,500,001–HK$2,000,000	—	2	—	3	2
HK$2,000,001–HK$2,500,000	—	1	—	1	1
HK$2,500,001–HK$3,000,000	1	—	2	—	—
HK$3,000,001–HK$3,500,000	—	1	—	—	1
HK$3,500,001–HK$4,000,000	1	—	—	—	—
HK$4,000,001–HK$4,500,000	1	—	—	—	—
HK$4,500,001–HK$5,000,000	—	—	1	—	—
	3	4	3	4	4

10. FINANCE COSTS

	Year ended 31 December			Nine months ended	

(a) PRC Enterprise Income Tax ("EIT")

Under the PRC Corporate Income Tax Law and the respective regulations, the corporate income tax for the Company and its subsidiaries are calculated at a statutory rate of 25% or a preferential rate of 15% where applicable, on their estimated taxable profits for the year/period based on the existing legislations, interpretations and practices in respect thereof.

In 2020, the company was recognised as a "High and New Technology Enterprise" ("HNTE"), therefore enjoyed a preferential income tax rate of 15% in 2020 to 2022. The Company renewed its HNTE recognition in 2023 and enjoyed the 15% preferential income tax rate in 2023 to 2025.

In 2021, subsidiaries of the Group Hefei Senior New Energy Materials Co., Ltd, Changzhou Senior New Energy Materials Co., Ltd and Jiangsu Senior New Material Technology Co., Ltd were recognised as "HNTE", therefore enjoyed a preferential income tax rate of 15% in 2021 to 2023. The subsidiaries of the Group renewed HNTE recognition in 2024 and can enjoy the 15% preferential income tax rate in 2024 to 2026.

In 2023, the subsidiary of the Group, Senior Material (Nantong) New Materials Technology Co., Ltd was recognised as a "HNTE", therefore enjoyed a preferential income tax rate of 15% in 2023 to 2025.

(b) Hong Kong Profits Tax

The Company's subsidiary domiciled in Hong Kong is subject to a two-tiered income tax rate for taxable income earned in Hong Kong effectively since 1 April 2018. The first 2 million Hong Kong dollars of profits earned by the qualifying group entity are subject to be taxed at an income tax rate of 8.25%, while the remaining profits will be taxed at 16.5%.

(c) Corporate income tax in other jurisdictions

Taxation for other overseas subsidiaries is charged at the appropriate current rates of taxation ruling in the relevant countries.

Reconciliation between the income tax expense (credit) and profit before income tax in the consolidated statements of comprehensive income is as follows:

	Year ended 31 December			Nine months ended 30 September	
	2022	2023	2024	2024	2025
	RMB'000	RMB'000	RMB'000	RMB'000 (unaudited)	RMB'000
Profit before income tax	847,929	717,048	407,019	401,767	127,478
Tax at the preferential tax rate of 15%	127,189	107,557	61,053	60,265	19,122
Tax effect of					
— different tax rates of the subsidiaries	160	(984)	(6,578)	(379)	(3,877)
— deductible temporary differences and tax losses for which no deferred income tax assets were recognised	22,541	52,925	20,172	19,744	16,590
— share of results of associates and joint venture	243	291	202	303	(11)
— non-deductible expenses	2,192	1,316	1,387	577	855
— utilisation of temporary differences and tax losses previously for which no deferred income tax assets were recognised	—	(1,548)	(1,511)	(1,226)	(19,004)
— under/(over) provision in respect of prior year/ period	1,080	749	(1,508)	(1,508)	37
— super deduction on research and development expenses and acquisition of equipment (Note)	(53,039)	(36,953)	(36,906)	(26,790)	(26,753)
	100,366	123,353	36,311	50,986	(13,041)

Note:

According to the relevant laws and regulations promulgated by the State Administration of Taxation of the PRC that have been effective from 2018 onwards, enterprises engaging in research and development activities are entitled to claim 175% and 200% of their research and development expenditures incurred as tax deductible expenses when determining their assessable profits for the period from 1 January 2022 to 30 September 2022 and for the period from 1 October 2022 to 30 September 2025, respectively.

THIS DOCUMENT IS INISORM,NTIPLEHNTEdCHANGNTEHE(n)]TJ T* .0705 Tc INFORMATIO(IN4-105(M)351.USENT3 2

The State Taxation Administration of the PRC announced in September 2022 that enterprises accredited as HNTE would be entitled to claim 100% of the purchase price for equipment and appliances newly purchased during the period from 1 October 2022 to 31 December 2022 as tax deductible expenses and 100% additional deduction for the year ended 31 December 2022.

12. DIVIDENDS

	Year ended 31 December			Nine months ended 30 September	
	2022	2023	2024	2024	2025
	RMB'000	RMB'000	RMB'000	RMB'000 (unaudited)	RMB'000
Dividends attributable to the year/period					
Final dividends	38,420	127,931	295,382	295,382	66,595

The final dividends of RMB0.50 per 10 shares (tax inclusive) totaling approximately RMB38,420,000 in respect of the year ended 31 December 2021 were approved in 2021 Annual General Meeting of the Company on 24 March 2022. The Group had not recognised this as a liability as at 31 December 2021 but reflected as an appropriation of retained earnings for the year ended 31 December 2021 during the year ended 31 December 2022. The final dividends were paid on 21 April 2022.

The final dividends of RMB1.00 per 10 shares (tax inclusive) totaling approximately RMB127,931,000 in respect of the year ended 31 December 2022 were approved in 2022 Annual General Meeting of the Company on 17 May 2023. The Group had not recognised this as a liability as at 31 December 2022 but reflected as an appropriation of retained earnings for the year ended 31 December 2022 during the year ended 31 December 2023. The final dividends were paid on 30 May 2023.

The final dividends of RMB2.20 per 10 shares (tax inclusive) totaling approximately RMB295,382,000 in respect of the year ended 31 December 2023 were approved in 2023 Annual General Meeting of the Company on 13 May 2024. The Group had not recognised this as a liability as at 31 December 2023 but reflected as an appropriation of retained earnings for the year ended 31 December 2023 during the year ended 31 December 2024. The final dividends were paid on 13 June 2024.

The final dividends of RMB5.00 per 10 shares (tax inclusive) totaling approximately RMB66,595,000 in respect of the year ended 31 December 2024 were approved in 2024 Annual General Meeting of the Company on 21 May 2025. The Group had not recognised this as a liability as at 31 December 2024 but reflected as an appropriation of retained earnings for the year ended 31 December 2024 during the nine months ended 30 September 2025. The final dividends were paid on 17 July 2025.

13. EPS

(a) Basic EPS

Basic EPS is calculated by dividing the profit attributable to owners of the Company by the weighted average number of ordinary shares in issue during the Track Record Period, excluding treasury shares held for share schemes as these shares are not considered outstanding for EPS calculation purposes.

The following table illustrates the earnings and shares information used in the calculation of basic EPS:

	Year ended 31 December			Nine months ended 30 September	
	2022	2023	2024	2024	2025
				(unaudited)	
Profit attributable to owners of the Company used in calculating basic EPS (RMB'000)	719,272	576,330	363,826	349,373	114,411
Weighted average number of ordinary shares in issue (thousand shares)	1,203,434	1,275,225	1,339,789	1,339,789	1,324,857
Basic EPS (RMB per share)	0.60	0.45	0.27	0.26	0.09

(b) Diluted EPS

The share schemes granted by the Company have potential dilutive effect on the EPS. Diluted EPS is calculated by adjusting the weighted average number of ordinary shares outstanding by the assumption of the conversion of all potential dilutive ordinary shares arising from share schemes (collectively forming the denominator for computing the diluted EPS).

	Year ended 31 December			Nine months ended 30 September	
	2022	2023	2024	2024	2025
				(unaudited)	
Profit attributable to owners of the Company used in calculating diluted EPS (RMB'000)	719,272	576,330	363,826	349,373	114,411
Weighted average number of ordinary shares in issue (thousand shares)	1,203,434	1,275,225	1,339,789	1,339,789	1,324,857
Adjustments for potential shares arising from share schemes (thousand shares)	1,991	—	3,950	—	—
Weighted average number of ordinary shares used in calculating diluted EPS (thousand shares)	1,205,425	1,275,225	1,343,739	1,339,789	1,324,857
Diluted EPS (RMB per share)	0.60	0.45	0.27	0.26	0.09

14. PROPERTY, PLANT AND EQUIPMENT

The Group

	Properties and buildings	Machinery	Transportation equipment	Administrative equipment	Experimental and other equipment	Freehold lands	Construction in progress	Total
	RMB'000 Note(a)	RMB'000	RMB'000	RMB'000	RMB'000	RMB'000 Note(b)	RMB'000	RMB'000
As at 1 January 2022								
Cost	687,953	3,499,299	11,646	11,349	81,548	—	497,330	4,789,125
Accumulated depreciation	(96,906)	(773,337)	(3,098)	(4,340)	(51,828)	—	—	(929,509)
Net carrying amount	591,047	2,725,962	8,548	7,009	29,720	—	497,330	3,859,616
Year ended 31 December 2022								
Opening net carrying amount	591,047	2,725,962	8,548	7,009	29,720	—	497,330	3,859,616
Additions	20,749	12,335	1,727	5,638	5,169	29,091	2,211,376	2,286,085
Disposals	—	(2,866)	—	—	(105)	—	—	(2,971)
Depreciation	(24,328)	(329,874)	(1,078)	(2,221)	(9,521)	—	—	(367,022)
Reclassification	358,587	255,151	824	1,550	3,373	—	(619,485)	—
Exchange realignment	—	49	—	(74)	—	44	(2,070)	(2,051)
Closing net carrying amount	946,055	2,660,757	10,021	11,902	28,636	29,135	2,087,151	5,773,657
As at 31 Dece4945.1(89-69-.8(0*R04E7.4(t4..D .055)-3073.1(251.67-3051.718.78,6)-413)8.6(75.3(7.6(679(11)9.465)-30734)8.6(197(11)9.465)051.71,c [(11)9.46588,451.718.t)-1(11)9.46								
Accumulate8766(43.3())-372239.1(7 .9()4.0914919906)		,176(773,337)35.3())		-4248.6(6)-4419	(12,3556.3())-4248.6(()-4.7(4)993(,)-.84340)35.3())		-3722.6(()4.9(51,8)9.3(2675.8())-68	

The Company

	Properties and buildings	Machinery	Transportation equipment	Administrative equipment	Experimental and other equipment	Construction in progress	Total
	RMB'000 Note(a)	RMB'000	RMB'000	RMB'000	RMB'000	RMB'000	RMB'000
As at 1 January 2022							
Cost	223,138	430,093	5,211	3,721	70,457	321,381	1,054,001
Accumulated depreciation	(55,712)	(292,359)	(2,141)	(2,042)	(49,356)	—	(401,610)
Net carrying amount	167,426	137,734	3,070	1,679	21,101	321,381	652,391
Year ended 31 December 2022							
Opening net carrying amount	167,426	137,734	3,070	1,679	21,101	321,381	652,391
Additions	—	4,404	255	451	3,709	117,147	125,966
Disposals	—	(204)	—	—	(105)	—	(309)
Depreciation	(6,415)	(30,954)	(411)	(603)	(6,886)	—	(45,269)
m o Reclassificatiuon .	1 292,441	(—	e —	- —	7 —	(292,49	1) (t
		Net carrying amount			167, 138	137,954	3070 1,679 2701

Note:

(a) The Company's properties and buildings are located in the PRC and the carrying amounts of the properties and buildings amounted to approximately RMB291,654,000, Nil, Nil and Nil as at 31 December 2022, 2023 and 2024 and 30 September 2025, respectively, are in the process of obtaining the property ownership certificates. The directors of the Company are of the opinion, the Company is entitled to lawfully and validly occupy and use the buildings, and therefore the aforesaid matter did not have any significant impact on the Company's statements of financial positions as at 31 December 2022, 2023 and 2024 and 30 September 2025, As of the date of this report, all ownership certificates have been obtained.

The Company has pledged certain property, plant and equipment with the following carrying

The Group

(a) Right-of-use assets

The movements in the net carrying amount of right-of-use assets are analysed as follows:

	Leased properties	Prepaid land lease payments	Total
	RMB'000	RMB'000	RMB'000
As a 1 January 2022	47,184	313,289	360,473
Additions	1,176	—	1,176
Depreciation	(4,444)	(7,613)	(12,057)
Exchange realignment	(2,915)	—	(2,915)
As at 31 December 2022	41,001	305,676	346,677
Additions	1,953	—	1,953
Depreciation	(8,186)	(7,613)	(15,799)
Exchange realignment	(2,712)	—	(2,712)
As at 31 December 2023	32,056	298,063	330,119

The maturity analysis of lease liabilities is disclosed in Note 40 to the Historical Financial Information.

(c) The amounts recognised in the consolidated statements of comprehensive income in relation to leases are as follows:

	Year ended 31 December			Nine months ended 30 September	
	2022	2023	2024	2024	2025
	RMB'000	RMB'000	RMB'000	RMB'000 (unaudited)	RMB'000
Interest expenses	13	—	2,547	1,352	3,011
Depreciation of right-of-use assets (net of capitalisation in construction in progress)	3,214	4,485	9,534	6,920	11,359
Expense relating to short-term leases and leases of low-value assets	1,081	1,294	1,887	907	1,421

The Company

(a) Right-of-use assets

The movements in the net carrying amount of right-of-use assets are analysed as follows:

	Prepaid land lease payments	Leased properties	Total
	RMB'000	RMB'000	RMB'000
As at 1 January 2022	61,888	83	61,971
Depreciation	(2,381)	(41)	(2,422)
As at 31 December 2022 and 1 January 2023	59,507	42	59,549
Additions	712	—	712
Depreciation	(2,408)	(42)	(2,450)
As at 31 December 2023 and 1 January 2024	57,811	—	57,811
Additions	—	8,113	8,113
Depreciation	(2,574)	(1,352)	(3,926)
As at 31 December 2024 and 1 January 2025	55,237	6,761	61,998
Depreciation	(1,804)	(2,028)	(3,832)
As at 30 September 2025	53,433	4,733	58,166

(b) Lease liabilities

	As at 31 December			As at 30 September
	2022	2023	2024	2025
	RMB'000	RMB'000	RMB'000	RMB'000
Total minimum lease payments	44	—	7,143	5,000
Future interest expense on lease liabilities	—	—	(322)	(161)
	44	—	6,821	4,839
Current	44	—	2,655	2,728
Non-current	—	—	4,166	2,111
	44	—	6,821	4,839

(c) The amounts recognised in the Company's statements of comprehensive income in relation to leases are as follows:

The Company

	Year ended 31 December			Nine months ended 30 September	
	2022	2023	2024	2024	2025
	RMB'000	RMB'000	RMB'000	RMB'000 (unaudited)	RMB'000
Interest expenses	3	—	136	—	160
Depreciation of right-of-use assets	2,422	2,450	3,926	1,973	3,832
Expense relating to short-term leases and leases of low-value assets	408	468	599	299	178

The Group as a lessor

The Group leases its properties in Chinese Mainland under operating lease arrangements. The terms of the leases generally require the tenants to pay security deposits and provide for periodic rent adjustments according to the then prevailing market conditions. Rental income recognised by the Group during the Track Record Period were included in Note 6 to the Historical Financial Information.

The Group

16. INTANGIBLE ASSETS

The Group

	Software and other intangible assets RMB'000
As at 1 January 2022	
Cost	10,415
Accumulated amortisation	(3,059)
Net carrying amount	7,356
Year ended 31 December 2022	
Opening net carrying amount	7,356
Additions	474
Amortisation	(1,452)
Closing net carrying amount	6,378
As at 31 December 2022	
Cost	10,889
Accumulated amortisation	(4,511)
Net carrying amount	6,378
Year ended 31 December 2023	
Opening net carrying amount	6,378
Additions	293
Amortisation	(1,397)
Exchange realignment	2
Closing net carrying amount	5,276
As at 31 December 2023	
Cost	11,184
Accumulated amortisation	(5,908)
Net carrying amount	5,276
Year ended 31 December 2024	
Opening net carrying amount	5,276
Additions	4,058
Amortisation	(1,489)
Exchange realignment	(1)
Closing net carrying amount	7,844
As at 31 December 2024	
Cost	15,241
Accumulated amortisation	(7,397)
Closing net carrying amount	7,844

	Software and other intangible assets RMB'000
Nine months ended 30 September 2025	
Opening net carrying amount	7,844
Additions	14,051
Amortisation	(2,159)
Exchange realignment	9
Closing net carrying amount	19,745
As at 30 September 2025	
Cost	29,304
Accumulated amortisation	(9,559)
Net carrying amount	19,745

The Company

	Software and other intangible assets
	RMB'000
As at 1 January 2022	
Cost	7,702
Accumulated amortisation	(2,489)
Net carrying amount	5,213
Year ended 31 December 2022	
Opening net carrying amount	5,213
Additions	51
Amortisation	(1,155)
Closing net carrying amount	4,109
As at 31 December 2022	
Cost	7,753
Accumulated amortisation	(3,644)
Net carrying amount	4,109
Year ended 31 December 2023	
Opening net carrying amount	4,109
Additions	268
Amortisation	(1,088)
Closing net carrying amount	3,289
As at 31 December 2023	
Cost	8,021
Accumulated amortisation	(4,732)
Net carrying amount	3,289
Year ended 31 December 2024	
Opening net carrying amount	3,289
Additions	241
Amortisation	(932)
Closing net carrying amount	2,598
As at 31 December 2024 and 1 January 2025	
Cost	8,262
Accumulated amortisation	(5,664)
Closing net carrying amount	2,598

	Software and other intangible assets RMB'000
Nine months ended 30 September 2025	
Opening net carrying amount	2,598
Additions	3,019
Amortisation	(1,125)
Closing net carrying amount	4,492
As at 30 September 2025	
Cost	11,281
Accumulated amortisation	(6,789)
Net carrying amount	4,492

17. INVESTMENTS IN ASSOCIATES AND JOINT VENTURE

The Group and The Company

	As at 31 December			As at 30 September
	2022	2023	2024	2025
	RMB'000	RMB'000	RMB'000	RMB'000
Unlisted investments	64,969	5,118	49,589	11,616
Opening net carrying amount	59,590	64,969	5,118	49,589
Additions (Note (e))	7,200	—	45,820	4,350
Disposals (Note(d) (e))	(199)	(57,911)	—	(42,398)
Share of results, net	(1,622)	(1,940)	(1,349)	75
Closing net carrying amount	64,969	5,118	49,589	11,616

Details of each of the Group's and The Company's investments in associates and joint venture at the end of each year/period for the Track Record Period are as follows:

	Place of registration and business	Percentage of ownership				Principal activities
		As at 31 December			As at 30 September	
		2022	2023	2024	2025	
		%	%	%	%	
Investment in joint venture						
Yantai Xinghe Battery Materials Technology Co., LTD ("Yantai Xinghe") (□□□□□□ □□) (Note (b))	The PRC	N/A	N/A	25	50	Manufacture and sales of special electronic materials
Investments in associates						
N-Tech Environmental Protection Science and Technology (Changzhou) Co., Ltd ("N-Tech") (□□□□ □□) (Note (b)(d))	The PRC	14.04	N/A	N/A	N/A	Manufacture and sales of high-performance water treatment membranes
Shenzhen Xinyuanbang Technology Co., Ltd. (□□□□□ □□)	The PRC	21.16	21.16	21.16	21.16	Manufacture and sales of special electronic materials
Shenzhen Qianhai Runmu Investment Partnership Enterprise (Limited Partnership) ("Runmu investment") (□□ □□□□ □□□ □□□□) (Note (e))	The PRC	N/A	N/A	40	N/A	Investment
Shenzhen Xinglanxin New Material Technology Co., Ltd. (□□ □□ □□□□ □□)	The PRC	N/A	N/A	N/A	31	Manufacture and sales of special electronic materials

Notes:

(a) In the opinion of the management, these investments in associates and joint venture are immaterial to the Group, both individually and in aggregate.

(b) Management has assessed the level of influence that the Group exercises on joint venture and associates, and determined that it has significant influence through the board representation and other relevant facts and circumstances. Accordingly, the investment in Yantai Xinghe have been classified as joint venture as at 31 December 2024 and 30 September 2025 as according to the shareholders agreement of Yantai Xinghe, the Group and the Company has the right to appoint 50% of Board and would be able to exercise joint control over the operation and financial matters of Yantai Xinghe even though the shareholding held by the Group and the Company was 25% at 31 December 2024. And the investment in N-Tech have been classified as associate at 31 December 2022 due to the Group and the Company have seats in the N-Tech's board of directors.

(c) There were no material contingent liabilities relating to the Group's investments in associates and joint venture.

(d) In December 2023, the N-Tech introduced a new investor and the Company's percentage of ownership decrease to 10.11% and lost the seat on the board of directors of the N-Tech. The Company no longer has a significant influence on N-Tech and accounted for the investment as FVTPL based on the investment strategy.

(e) The Group jointly invested with Shenzhen Qianhai Runmu Management Co., Ltd., an associate of the Group (see Note 38) to establish Shenzhen Qianhai Runmu Investment Partnership Enterprise (Limited Partnership). The Group, as a limited partner, subscribed for a capital contribution of RMB40,000,000, holding a 40% stake. In January 2024, the Group paid the capital contribution of RMB40,000,000.

In March 2025, the shareholders of Runmu investment decided to cea264.5((yided)-241(autiors)-267.1ta)6(n

the arlevaent liquida[illegible]

The Company

	As at 31 December			As at 30 September
	2022	2023	2024	2025
	RMB'000	RMB'000	RMB'000	RMB'000
Current:				
— Bank WMPs and structured deposits (Note)	1,393,763	558,477	190,564	—
— Fund products	50,002	251,803	38,803	—
	1,443,765	810,280	229,367	—
Non-current:				
— Unlisted equity instruments	—	63,912	76,682	78,765

Note:

The WMPs and structured deposits are managed by licensed financial institutions in the PRC to invest principally in certain financial assets. They were classified as financial assets at fair value through profit or loss as their contractual cash flows are not solely payments of principal and interest.

(b) Financial liabilities at FVTPL

The Group and The Company

	As at 31 December			As at 30 September
	2022	2023	2024	2025
	RMB'000	RMB'000	RMB'000	RMB'000
Current:				
— Foreign exchange forward contracts	—	—	—	15,860

19. FINANCIAL ASSETS AT FVTOCI

The Group

	As at 31 December			As at 30 September
	2022	2023	2024	2025
	RMB'000	RMB'000	RMB'000	RMB'000
Current:				
— Notes receivables measured at FVTOCI (Note (a))	87,503	79,585	292,318	306,162
Non-current:				
— Equity investments at fair value (Note (b))	—	—	—	18,816

Notes:

20. INVENTORIES

The Group

	As at 31 December			As at 30 September
	2022	2023	2024	2025
	RMB'000	RMB'000	RMB'000	RMB'000
Raw materials	142,304	208,094	289,560	312,180
Semi-finished goods	73,868	128,574	111,277	192,255
Finished goods	91,474	103,282	162,885	258,356
	307,646	439,950	563,722	762,791
Less: provision for impairment (Note)	(23,944)	(43,086)	(45,659)	(53,260)
	283,702	396,864	518,063	709,531

The Company

	As at 31 December			As at 30 September
	2022	2023	2024	2025
	RMB'000	RMB'000	RMB'000	RMB'000
Raw materials	22,882	32,165	31,273	21,603
Semi-finished goods	17,340	12,522	5,461	850
Finished goods	26,213	40,661	47,280	44,451
	66,435	85,348	84,014	66,904
Less: provision for impairment (Note)	(9,870)	(7,530)	(1,150)	(2,768)
	56,565	77,818	82,864	64,136

Note: The directors of the Company review the condition of inventories and make allowance for inventories that are identified as obsolete, slow-moving or no longer recoverable or suitable for use in production. Inventory review was carried out at each reporting date on a product-by-product basis and makes allowance by reference to the latest market prices and current market conditions for the Group and the Company.

21. TRADE AND NOTES RECEIVABLES

The Group

	As at 31 December			As at 30 September
	2022	2023	2024	2025
	RMB'000	RMB'000	RMB'000	RMB'000
Trade receivables	1,302,035	1,636,279	2,120,371	2,058,596
Notes receivables (Note)	221,582	180,143	359,154	553,946
	1,523,617	1,816,422	2,479,525	2,612,542
Less: allowance for impairment	(31,318)	(43,173)	(103,469)	(54,436)
	1,492,299	1,773,249	2,376,056	2,558,106

Note: The amount of the Group's endorsed and discounted notes receivables which are not derecognised as at 31 December 2022, 2023 and 2024 and 30 September 2025 are approximately RMB71,273,000, RMB94,284,000, RMB233,440,000 and RMB259,863,000, respectively.

The Company

	As at 31 December			As at 30 September
	2022	2023	2024	2025
	RMB'000	RMB'000	RMB'000	RMB'000
Trade receivables	864,645	1,128,038	1,619,584	1,457,722
Notes receivables (Note)	95,762	67,784	78,892	119,282
	960,407	1,195,822	1,698,476	1,577,004
Less: allowance for impairment	(23,005)	(30,978)	(38,042)	(38,236)
	937,402	1,164,844	1,660,434	1,538,768

Note: The amount of the Company's endorsed and discounted notes receivables which are not derecognised as at 31 December 2022, 2023 and 2024 and 30 September 2025 are approximately RMB9,616,000, RMB48,135,000, RMB24,529,000 and RMB30,700,000, respectively.

Certain trade and notes receivables are pledged as security for the Group's borrowings, details are disclosed in Note 34 to the Historical Financial Information.

The credit period granted to customers is generally within 180 days during the Track Record Period.

The ageing analysis of trade receivables based on recognition date is as follows:

The Group

	As at 31 December			As at 30 September
	2022	2023	2024	2025
	RMB'000	RMB'000	RMB'000	RMB'000
Within 1 year	1,276,477	1,607,743	2,077,976	2,029,912
Over 1 year but within 2 years	6,620	7,675	23,687	9,832
Over 2 years but within 3 years	4,549	4,744	1,232	2,823
Over 3 years	14,389	16,117	17,476	16,029
	1,302,035	1,636,279	2,120,371	2,058,596

The Company

	As at 31 December			As at 30 September
	2022	2023	2024	2025
	RMB'000	RMB'000	RMB'000	RMB'000
Within 1 year	843,113	1,108,421	1,601,788	1,440,230
Over 1 year but within 2 years	5,162	2,323	2,713	2,331
Over 2 years but within 3 years	4,458	3,745	1,173	2,101
Over 3 years	11,912	13,549	13,910	13,060
	864,645	1,128,038	1,619,584	1,457,722

Movements in impairment of trade and notes receivables are as follows:

The Group

	Year ended 31 December			Nine months ended 30 September
	2022	2023	2024	2025
	RMB'000	RMB'000	RMB'000	RMB'000
At the beginning of the year/period	30,158	31,318	43,173	103,469
Impairment recognised, net	14,785	12,629	62,306	1,051
Written off	(13,645)	(859)	(670)	(50,012)
Exchange realignment	20	85	(1,340)	(72)
At the end of the year/period	31,318	43,173	103,469	54,436

Detail information about the impairment of trade and notes receivables and the Group's exposure to credit risk is described in Note 41.

The Company

	Year ended 31 December			Nine months ended 30 September
	2022	2023	2024	2025
	RMB'000	RMB'000	RMB'000	RMB'000
At the beginning of the year/period	26,160	23,005	30,978	38,042
Impairment recognised, net	10,490	8,832	7,528	194
Written off	(13,645)	(859)	(464)	—
At the end of the year/period	23,005	30,978	38,042	38,236

As at 31 December 2022, 2023 and 2024 and 30 September 2025, the Company's impairment of notes receivables are approximately RMB634,000, RMB390,000, RMB232,000 and RMB310,000, respectively.

22. PREPAYMENTS, OTHER RECEIVABLES AND OTHER ASSETS

The Group

	As at 31 December			As at 30 September
	2022	2023	2024	2025
	RMB'000	RMB'000	RMB'000	RMB'000
Other receivables	7,969	8,722	18,784	33,874

The Company

	As at 31 December			As at 30 September
	2022	2023	2024	2025
	RMB'000	RMB'000	RMB'000	RMB'000
Other receivables	1,387	2,581	1,261	1,282
Less: allowance for impairment	(66)	(159)	(63)	(64)
	1,321	2,422	1,198	1,218
Prepayment for acquisition of non-current assets	36,923	195,397	175,953	78,700
VAT recoverable	23,097	13,735	25,725	31,047
Prepayments for materials and others	56,156	2,281	1,884	2,176
Deferred [REDACTED] expenses	[REDACTED]	[REDACTED]	[REDACTED]	[REDACTED]
	117,497	213,835	204,760	128,587
Analysed for reporting purposes as:				
Current assets	80,574	18,438	28,807	49,887
Non-current assets	36,923	195,397	175,953	78,700
	117,497	213,835	204,760	128,587

The movements on the impairment of other receivables are as follows:

The Group

	Stage 1	Stage 2	Stage 3	Total
	RMB'000	RMB'000	RMB'000	RMB'000
As at 1 January 2022	294	—	—	294
Provision	69	—	—	69
Exchange realignment	1	—	—	1
As at 31 December 2022 and 1 January 2023	364	—	—	364
Provision	100	—	—	100
Exchange realignment	2	—	—	2
As at 31 December 2023 and 1 January 2024	466	—	—	466
Provision	454	—	—	454
Exchange realignment	2	—	—	2
As at 31 December 2024 and 1 January 2025	922	—	—	922
Provision	761	—	—	761
Exchange realignment	(1)	—	—	(1)
As at 30 September 2025	1,682	—	—	1,682

The restricted bank deposits of the Group and the Company are mainly RMB deposits. Certain deposits are pledged as security for the Group's and the Company's borrowings and notes payable, details are disclosed in Note 34 to the Historical Financial Information.

24. TIME DEPOSITS

The Group

	As at 31 December			

Denominated in:

	As at 31 December			As at 30 September
	2022	2023	2024	2025
	RMB'000	RMB'000	RMB'000	RMB'000
RMB	1,024,229	1,781,762	71,661	156,692
USD	176,114	—	—	—
	1,200,343	1,781,762	71,661	156,692

All restricted bank deposits and time deposits as at 31 December 2022, 2023 2024 and 30 September 2025 are pledged (Note 23 and 34).

25. CASH AND CASH EQUIVALENTS

The Group

	As at 31 December			As at 30 September
	2022	2023	2024	2025
	RMB'000	RMB'000	RMB'000	RMB'000
Cash and cash in bank	1,293,953	1,744,409	2,650,754	1,951,489

Denominated in:

	As at 31 December			As at 30 September
	2022	2023	2024	2025
	RMB'000	RMB'000	RMB'000	RMB'000
RMB	1,037,074	570,712	1,503,567	1,097,570
USD	119,065	1,048,645	997,176	286,403
SGD	50,023	20,859	21,174	212,390
MYR	—	43,773	33,386	216,136
Others	87,791	60,420	95,451	138,990
	1,293,953	1,744,409	2,650,754	1,951,489

RMB is not freely convertible into other currencies, however, under Mainland China's Foreign Exchange Control Regulations and Administration of Settlement, and Sale and Payment of Foreign Exchange Regulations, the Group is permitted to exchange RMB for other currencies through banks authorised to conduct foreign exchange business. Cash at banks earns interest at floating rates based on daily bank deposit rates. Short term time deposits are made depending on the immediate cash requirements of the Group and earn interest at the respective short term time deposit rates. The bank balances are deposited with creditworthy banks with no recent history of default.

The Company

	As at 31 December			As at 30 September
	2022	2023	2024	2025
	RMB'000	RMB'000	RMB'000	RMB'000
Cash and cash in bank	627,372	1,029,618	995,122	656,123

(a) Deferred income tax assets

The movements in deferred income tax assets during the Track Record Period are as follows:

	Impairment provision	Tax losses	Unrealised profit on intra-group transactions	Share-based payment	Deferred income	Lease liabilities	Others	Total
	RMB'000	RMB'000	RMB'000	RMB'000	RMB'000	RMB'000	RMB'000	RMB'000
As at 1 January 2022	9,638	11,791	454	18,623	—	—	73	40,579
(Reversed)/Recognised in profit or loss	(1,377)	8,992	1,391	(5,154)	—	—	(73)	3,779
Reversed in capital reserve	—	—	—	(9,847)	—	—	—	(9,847)
As at 31 December 2022 and 1 January 2023	8,261	20,783	1,845	3,622	—	—	—	34,511
(Reversed)/Recognised in profit or loss	(3,165)	(17,257)	926	(3,523)	—	—	—	(23,019)
Reversed in capital reserve	—	—	—	(99)	—	—	—	(99)
As at 31 December 2023 and 1 January 2024	5,096	3,526	2,771	—	—	—	—	11,393
Recognised in profit or loss	1,775	18,958	1,804	—	19,950	64,865	—	107,352
Exchange realignment	—	12	—	—	—	—	—	12
As at 31 December 2024 and 1 January 2025	6,871	22,496	4,575	—	19,950	64,865	—	118,757
Recognised/(Reversed) in profit or loss	907	71,462	(215)	—	(754)	(3,905)	—	67,495
As at 30 September 2025	7,778	93,958	4,360	—	19,196	60,960	—	186,252

(b) Deferred income tax liabilities

The movements in deferred income tax liabilities during the Track Record Period are as follows:

	Depreciation of fixed assets	Right-of-use assets	Others	Total
	RMB'000	RMB'000	RMB'000	RMB'000
As at 1 January 2022	39,461	—	6,287	45,748
(Reversed)/Recognised in profit or loss	(479)	—	191	(288)
As at 31 December 2022 and 1 January 2023	38,982	—	6,478	45,460
Reversed in profit or loss	(4,780)	—	(1,457)	(6,237)
As at 31 December 2023 and 1 January 2024	34,202	—	5,021	39,223
Recognised/(Reversed) in profit or loss	28,076	64,936	(713)	92,299
As at 31 December 2024 and 1 January 2025	62,278	64,936	4,308	131,522
(Reversed)/Recognised in profit or loss	14,347	(7,259)	4,000	11,088
Exchange realignment	—	20	6	26
As at 30 September 2025	76,625	57,697	8,314	142,636

(c) Tax losses and deductible temporary differences with deferred income tax assets not recognised

Deferred income tax assets should be recognised when it is probable that taxable profits or taxable temporary differences will be available against which the deferred income tax assets can be utilised. Temporary differences will not be recognised as deferred income tax assets if management estimates that they will not be recovered from taxable profits generated from continuing operations in the foreseeable future. The following table sets forth the tax losses and deductible temporary differences which were not recognised as deferred income tax assets at the end of each year/period for the Track Record Period:

	As at 31 December			As at 30 September
	2022	2023	2024	2025
	RMB'000	RMB'000	RMB'000	RMB'000
Tax losses	143,307	380,130	340,177	211,115
Deductible temporary differences	555	52,754	179,697	214,299
	143,862	432,884	519,874	425,414

The Group has unused tax losses of approximately RMB281,860,000, RMB403,637,000, RMB490,150,000 and RMB837,502,000 as at 31 December 2022, 2023 and 2024 and 30 September 2025, respectively, available for offset against future profits. Certain deferred income tax assets has not been recognised for these tax losses due to the unpredictability of future profit streams. Included in unrecognised tax losses are losses of approximately RMB143,307,000, RMB380,130,000, RMB340,177,000 and RMB211,115,000, respectively, can be carried forward as below:

	As at 31 December			As at 30 September
	2022	2023	2024	2025
	RMB'000	RMB'000	RMB'000	RMB'000
2026	1,854	—	—	—
2027	59,110	—	—	—
2028	38,811	31	—	—
2031	—	1,768	—	—
2032	—	109,577	63,872	—
2033	—	215,125	203,155	136,781
2034	—	—	13,372	13,372
Indefinitely	43,532	53,629	59,778	60,962
	143,307	380,130	340,177	211,115

(b) Deferred income tax liabilities

The movements in deferred income tax liabilities during the Track Record Period are as follows:

	Fair value change of financial assets at FVTPL
	RMB'000
As at 1 January 2022, 31 December 2022 and 1 January 2023	535
Reversed in profit or loss	(535)
As at 31 December 2023 and 2024 and 30 September 2025	—

(c) Tax losses and deductible temporary differences with deferred income tax assets not recognised

Deferred income tax assets should be recognised when it is probable that taxable profits or taxable temporary differences will be available against which the deferred income tax assets can be utilised. Temporary differences will not be recognised as deferred income tax assets if management estimates that they will not be recovered from taxable profits generated from continuing operations in the foreseeable future. The following table sets forth the tax losses and deductible temporary differences which were not recognised as deferred income tax assets at the end of each year/period for the Track Record Period:

	As at 31 December			As at 30 September
	2022	2023	2024	2025
	RMB'000	RMB'000	RMB'000	RMB'000
Tax losses	—	286,027	280,399	151,171
Deductible temporary differences	—	38,668	61,466	56,406
	—	324,695	341,865	207,577

The Company has unused tax losses of approximately RMB72,613,000, RMB286,027,000, RMB299,399,000 and RMB297,858,000 as at 31 December 2022, 2023 and 2024 and 30 September 2025, respectively, available for offset against future profits. Certain deferred income tax assets has not been recognised for these tax losses due to the unpredictability of future profit streams. Included in unrecognised tax losses are losses of Nil, RMB286,027,000, RMB280,399,000 and RMB151,171,000, respectively, can be carried forward as below:

	As at 31 December			As at 30 September
	2022	2023	2024	2025
	RMB'000	RMB'000	RMB'000	RMB'000
2032	—	82,872	63,872	137,799
2033	—	203,155	203,155	13,372
2034	—	—	13,372	—
	—	286,027	280,399	151,171

27. TRADE AND NOTES PAYABLES

The Group

	As at 31 December			As at 30 September
	2022	2023	2024	2025
	RMB'000	RMB'000	RMB'000	RMB'000
Trade payables	304,172	338,631	411,667	423,260
Notes payables	235,932	139,823	120,614	248,132
	540,104	478,454	532,281	671,392

The credit period granted by suppliers is generally within 90 days. The ageing analysis of the trade payables of the Group as at 31 December 2022, 2023 and 2024 and 30 September 2025 based on recognition date is as follows:

	As at 31 December			As at 30 September
	2022	2023	2024	2025
	RMB'000	RMB'000	RMB'000	RMB'000
— Within 1 year	296,839	331,427	401,278	406,983
— Over 1 year but within 2 years	7,022	6,324	7,418	11,329
— Over 2 years but within 3 years	50	608	2,349	2,938
— Over 3 years	261	272	622	2,010
	304,172	338,631	411,667	423,260

As at the end of each year/period for the Track Record Period, no matured notes payables were unpaid.

Details of the Group's assets pledged for the Group's notes payables are disclosed in Note 34 to the Historical Financial Information.

The Company

	As at 31 December			As at 30 September
	2022	2023	2024	2025
	RMB'000	RMB'000	RMB'000	RMB'000
Trade payables	58,457	111,604	39,838	40,696
Notes payables	173,711	114,366	49,412	116,767
	232,168	225,970	89,250	157,463

The ageing analysis of the trade payables of the Company as at 31 December 2022, 2023 and 2024 and 30 September 2025 based on recognised date is as follows:

	As at 31 December			As at 30 September
	2022	2023	2024	2025
	RMB'000	RMB'000	RMB'000	RMB'000
— Within 1 year	57,952	111,181	39,527	33,193
— Over 1 year but within 2 years	505	208	144	4,286
— Over 2 years but within 3 years	—	215	30	2,387
— Over 3 years	—	—	137	830
	58,457	111,604	39,838	40,696

28. OTHER PAYABLES AND ACCRUALS

The Group

	As at 31 December			As at 30 September
	2022	2023	2024	2025
	RMB'000	RMB'000	RMB'000	RMB'000
Payables for acquisition of non-current assets	495,304	577,786	1,110,936	1,049,057
Deferred government grants	308,602	453,920	475,458	481,386
Settlement expenses for litigation	—	107,657	—	—
Endorsed notes receivable that have not been derecognised and not yet due	—	65,512	160,350	221,953
Employee benefits payables	93,689	56,260	61,855	56,669
Accrued [REDACTED] expenses	[REDACTED]	[REDACTED]	[REDACTED]	[REDACTED]
Deposits received	11269	21,577	15,004	11,381
Other tax payables	16,451	27,616	16,264	29,810
Repurchase obligation for restricted shares	49,790	37,781	12,456	—
Others	27,321	27,854	28,650	56,006
	1,002,426	1,375,963	1,880,973	1,909,945
Analysed for reporting purposes as:				
Current liabilities	668,029	899,443	1,382,915	1,428,559
Non-current liabilities	334,397	476,520	498,058	481,386
	1,002,426	1,375,963	1,880,973	1,909,945

The Company

	As at 31 December			As at 30 September
	2022	2023	2024	2025
	RMB'000	RMB'000	RMB'000	RMB'000
fors 2cquisitions fsnon-cur				

29. BORROWINGS

The Group

	As at 31 December			As at 30 September
	2022	2023	2024	2025
	RMB'000	RMB'000	RMB'000	RMB'000
Current				
Secured borrowings:				
Short-term bank borrowings	—	—	—	29,999
Advances from banks on discounted notes receivables(Note (c))	630,176	1,418,330	2,509,090	3,013,302
Current portion of long-term bank borrowings	262,309	639,686	607,622	1,006,756
Current portion of long-term other borrowings	—	—	—	122,928
	892,485	2,058,016	3,116,712	4,172,985
Unsecured borrowings:				
Short-term bank borrowings	157,178	328,931	752,870	1,190,890
Current portion of long-term bank borrowings	30,000	212,000	134,000	257,100
Current portion of long-term other borrowings	—	—	101,485	66,880
	187,178	540,931	988,355	1,514,870
	1,079,663	2,598,947	4,105,067	5,687,855
Non-current				
Secured borrowings:				
Non-current portion of long-term bank borrowings	2,047,447	2,843,824	5,518,518	5,050,127
Non-current portion of long-term other borrowings	—	—	—	427,299
	2,047,447	2,843,824	5,518,518	5,477,426
Unsecured borrowings:				
Non-current portion of long-term bank borrowings	155,000	80,000	279,000	1,001,544
Non-current portion of long-term other borrowings	167,931	487,812	481,469	423,882
	322,931	567,812	760,469	1,425,426
	2,370,378	3,411,636	6,278,987	6,902,852

As at 31 December 2022, 2023 and 2024 and 30 September 2025, the borrowings bear effective interest rates range of 2.80% 4.40%, 2.40%* 4.25%, 2.28%* 5.59% and 1.96%* 3.55% per annum respectively.

Notes:

(a) Bank's credit facilities amounted to approximately RMB4,067,788,000, RMB8,850,480,000,

During the Track Record Period, the Group did not violate any financial covenants under the agreements of borrowings. The Group's and the Company's borrowings were repayable as follows:

The Group

	As at 31 December			As at 30 September
	2022	2023	2024	2025
	RMB'000	RMB'000	RMB'000	RMB'000
Analysed as:				
— Within 1 year	1,079,663	2,598,947	4,105,067	5,687,855
— Over 1 year but within 2 years	711,582	650,096	1,642,017	2,090,519
— Over 2 years but within 3 years	494,424	747,375	1,717,634	2,395,783
— Over 3 years	1,164,372	2,014,165	2,919,336	2,416,550
	3,450,041	6,010,583	10,384,054	12,590,707

The Company

	As at 31 December			As at 30 September
	2022	2023	2024	2025
	RMB'000	RMB'000	RMB'000	RMB'000
Analysed as:				
— Within 1 year	107,094	351,425	702,489	1,120,446
— Over 1 year but within 2 years	160,438	120,000	182,000	499,000
— Over 2 years but within 3 years	60,000	40,000	177,000	535,000
— Over 3 years	190,000	150,000	110,000	80,000
	517,532	661,425	1,171,489	2,234,446

The Group's and the Company's borrowings that aredenominated in currencies of the relevant group entities are set out below:

The Group

Denominated in:

	As at 31 December			As at 30 September
	2022	2023	2024	2025
	RMB'000	RMB'000	RMB'000	RMB'000
RMB	3,450,041	6,010,583	9,326,845	11,422,654
EUR	—	—	1,057,209	1,168,053
	3,450,041	6,010,583	10,384,054	12,590,707

The Company

Denominated in:

	As at 31 December			As at 30 September
	2022	2023	2024	2025
	RMB'000	RMB'000	RMB'000	RMB'000
RMB	517,532	661,425	1,171,489	2,234,446

Details of the Group's borrowing with floating rate are disclosed in Note 41 to the Historical Financial Information.

30. SHARE CAPITAL AND TREASURY SHARES

The Group and the Company

	As at 31 December			As at 30 September
	2022	2023	2024	2025
	RMB'000	RMB'000	RMB'000	RMB'000
Share capital	1,280,806	1,345,107	1,342,957	1,348,124
Treasury shares reserve	(100,566)	(89,122)	(62,765)	(350,758)
	1,180,240	1,255,985	1,280,192	997,366

The changes in the Company's authorised, issued and fully paid share capital are as follows:

	Number of shares '000	Share capital RMB'000
Ordinary shares of RMB1 each		
As at 1 January 2022	768,409	768,409
Issue of Shares under restricted shares incentive schemes (Note (a))	2,590	2,590
Repurchase and cancellation of shares under restricted shares incentive schemes (Note (b))	(70)	(70)
Private placement (Note (e))	125,673	125,673
Conversion of capital reserve into share capital (Note (d))	384,204	384,204
As at 31 December 2022 and 1 January 2023	1,280,806	1,280,806
Issue of Shares under restricted shares incentive schemes (Note (a))	921	921
Repurchase and cancellation of shares under restricted shares incentive schemes (Note (b))	(44)	(44)
Private placement (Note (e))	63,424	63,424
As at 31 December 2023 and 1 January 2024	1,345,107	1,345,107
Repurchase and cancellation of shares under restricted shares incentive schemes (Note (b))	(2,150)	(2,150)
As at 31 December 2024 and 1 January 2025	1,342,957	1,342,957
Repurchase and cancellation of shares under restricted shares incentive schemes (Note (b))	(1,065)	(1,065)
Issue of Shares under restricted shares incentive schemes (Note (a))	6,232	6,232
As at 30 September 2025	1,348,124	1,348,124
As at 1 January 2024	1,345,107	1,345,107
Repurchase and cancellation of shares under restricted shares incentive schemes (Note (b)) (Unaudited)	(2,150)	(2,150)
As at 30 September 2024 (Unaudited)	1,342,957	1,342,957

Semi-Solid-State Electrolyte Separator Technology

A semi-solid-state electrolyte separator is an important component in semi-solid-state batteries, acting as an intermediate technology between conventional liquid electrolyte batteries and solid-state batteries. Semi-solid-state electrolyte separators are produced using advanced composite coating and integrated moulding technologies. Composite coating involves applying a semi-solid electrolyte onto a separator substrate to enhance ionic conductivity and stability. Integrated moulding combines fibre frameworks with solid electrolytes, resulting in high strength, high lithium-ion conductivity and low interfacial impedance. Semi-solid-state electrolyte separators are essential for semi-solid-state batteries because they enhance safety by reducing the risk of leaks and fires associated with liquid electrolytes. They also improve energy density, leading to more powerful and longer-lasting batteries. Additionally, these separators offer better ionic conductivity and mechanical strength, which boosts overall battery performance and durability. They are cost-effective, utilising existing lithium-ion battery manufacturing processes, and serve as a crucial bridge between current lithium-ion batteries and future solid-state batteries, facilitating technological advancements.

Our semi-solid-state electrolyte separators, with a thicknesses range of 3–20 m, are engineered for high-performance EVs, drones and robots. These separators feature superior low-temperature performance, enhanced safety profiles and low interface resistance, making them ideal for advanced battery solutions. For example, our LATP electrolyte membrane demonstrates excellent low-temperature performance, with an improvement of around 8% in low-temperature cycling at –25°C as compared to current lithium-ion battery separators, surpassing that of most separators, which typically exhibit capacity retention losses exceeding 10 to 15% under the same conditions. Our semi-solid-state electrolyte separator products have been designed to c12uu4(a)1(nallo)-858.3(igrlyt)-4-stateLitosi91.94(di

Semi-Solid-State Electrolyte Separator Technology

A semi-solid-state electrolyte separator is an important component in semi-solid-state batteries, acting as an intermediate technology between conventional liquid electrolyte batteries and solid-state batteries. Semi-solid-state electrolyte separators are produced using advanced composite coating and integrated moulding technologies. Composite coating involves applying a semi-solid electrolyte onto a separator substrate to enhance ionic conductivity and stability. Integrated moulding combines fibre frameworks with solid electrolytes, resulting in high strength, high lithium-ion conductivity and low interfacial impedance. Semi-solid-state electrolyte separators are essential for semi-solid-state batteries because they enhance safety by reducing the risk of leaks and fires associated with liquid electrolytes. They also improve energy density, leading to more powerful and longer-lasting batteries. Additionally, these separators offer better ionic conductivity and mechanical strength, which boosts overall battery performance and durability. They are cost-effective, utilising existing lithium-ion battery manufacturing processes, and serve as a crucial bridge between current lithium-ion batteries and future solid-state batteries, facilitating technological advancements.

Our semi-solid-state electrolyte separators, with a thicknesses range of 3–20 m, are engineered for high-performance EVs, drones and robots. These separators feature superior low-temperature performance, enhanced safety profiles and low interface resistance, making them ideal for advanced battery solutions. For example, our LATP electrolyte membrane demonstrates excellent low-temperature performance, with an improvement of around 8% in low-temperature cycling at –25°C as compared to current lithium-ion battery separators, surpassing that of most separators, which typically exhibit capacity retention losses exceeding 10 to 15% under the same conditions. Our semi-solid-state electrolyte separator products have been designed to c12uu4(a)1(nallo)-858.3(igrlyt)-4-stateLitosi91.94(di

Semi-Solid-State Electrolyte Separator Technology

A semi-solid-state electrolyte separator is an important component in semi-solid-state batteries, acting as an intermediate technology between conventional liquid electrolyte batteries and solid-state batteries. Semi-solid-state electrolyte separators are produced using advanced composite coating and integrated moulding technologies. Composite coating involves applying a semi-solid electrolyte onto a separator substrate to enhance ionic conductivity and stability. Integrated moulding combines fibre frameworks with solid electrolytes, resulting in high strength, high lithium-ion conductivity and low interfacial impedance. Semi-solid-state electrolyte separators are essential for semi-solid-state batteries because they enhance safety by reducing the risk of leaks and fires associated with liquid electrolytes. They also improve energy density, leading to more powerful and longer-lasting batteries. Additionally, these separators offer better ionic conductivity and mechanical strength, which boosts overall battery performance and durability. They are cost-effective, utilising existing lithium-ion battery manufacturing processes, and serve as a crucial bridge between current lithium-ion batteries and future solid-state batteries, facilitating technological advancements.

Our semi-solid-state electrolyte separators, with a thicknesses range of 3–20 m, are engineered for high-performance EVs, drones and robots. These separators feature superior low-temperature performance, enhanced safety profiles and low interface resistance, making them ideal for advanced battery solutions. For example, our LATP electrolyte membrane demonstrates excellent low-temperature performance, with an improvement of around 8% in low-temperature cycling at –25°C as compared to current lithium-ion battery separators, surpassing that of most separators, which typically exhibit capacity retention losses exceeding 10 to 15% under the same conditions. Our semi-solid-state electrolyte separator products have been designed to c12uu4(a)1(nallo)-858.3(igrlyt)-4-stateLitosi91.94(di

Operational Independence

Our Company will continue to operate independently from our Single Largest Shareholders after the [REDACTED]. Our Company has our own organisational structure with independent departments, each with specific areas of responsibility. Furthermore, we have independent production capabilities and technology relating to our Group's business and do not rely on our Single Largest Shareholders or any of their close associates. Our

Operational Independence

Our Company will continue to operate independently from our Single Largest Shareholders after the [REDACTED]. Our Company has our own organisational structure with independent departments, each with specific areas of responsibility. Furthermore, we have independent production capabilities and technology relating to our Group's business and do not rely on our Single Largest Shareholders or any of their close associates. Our

Operational Independence

Our Company will continue to operate independently from our Single Largest Shareholders after the [REDACTED]. Our Company has our own organisational structure with independent departments, each with specific areas of responsibility. Furthermore, we have independent production capabilities and technology relating to our Group's business and do not rely on our Single Largest Shareholders or any of their close associates. Our

Semi-Solid-State Electrolyte Separator Technology

A semi-solid-state electrolyte separator is an important component in semi-solid-state batteries, acting as an intermediate technology between conventional liquid electrolyte batteries and solid-state batteries. Semi-solid-state electrolyte separators are produced using advanced composite coating and integrated moulding technologies. Composite coating involves applying a semi-solid electrolyte onto a separator substrate to enhance ionic conductivity and stability. Integrated moulding combines fibre frameworks with solid electrolytes, resulting in high strength, high lithium-ion conductivity and low interfacial impedance. Semi-solid-state electrolyte separators are essential for semi-solid-state batteries because they enhance safety by reducing the risk of leaks and fires associated with liquid electrolytes. They also improve energy density, leading to more powerful and longer-lasting batteries. Additionally, these separators offer better ionic conductivity and mechanical strength, which boosts overall battery performance and durability. They are cost-effective, utilising existing lithium-ion battery manufacturing processes, and serve as a crucial bridge between current lithium-ion batteries and future solid-state batteries, facilitating technological advancements.

Our semi-solid-state electrolyte separators, with a thicknesses range of 3–20 m, are engineered for high-performance EVs, drones and robots. These separators feature superior low-temperature performance, enhanced safety profiles and low interface resistance, making them ideal for advanced battery solutions. For example, our LATP electrolyte membrane demonstrates excellent low-temperature performance, with an improvement of around 8% in low-temperature cycling at –25°C as compared to current lithium-ion battery separators, surpassing that of most separators, which typically exhibit capacity retention losses exceeding 10 to 15% under the same conditions. Our semi-solid-state electrolyte separator products have been designed to c12uu4(a)1(nallo)-858.3(igrlyt)-4-stateLitosi91.94(di

Semi-Solid-State Electrolyte Separator Technology

A semi-solid-state electrolyte separator is an important component in semi-solid-state batteries, acting as an intermediate technology between conventional liquid electrolyte batteries and solid-state batteries. Semi-solid-state electrolyte separators are produced using advanced composite coating and integrated moulding technologies. Composite coating involves applying a semi-solid electrolyte onto a separator substrate to enhance ionic conductivity and stability. Integrated moulding combines fibre frameworks with solid electrolytes, resulting in high strength, high lithium-ion conductivity and low interfacial impedance. Semi-solid-state electrolyte separators are essential for semi-solid-state batteries because they enhance safety by reducing the risk of leaks and fires associated with liquid electrolytes. They also improve energy density, leading to more powerful and longer-lasting batteries. Additionally, these separators offer better ionic conductivity and mechanical strength, which boosts overall battery performance and durability. They are cost-effective, utilising existing lithium-ion battery manufacturing processes, and serve as a crucial bridge between current lithium-ion batteries and future solid-state batteries, facilitating technological advancements.

Our semi-solid-state electrolyte separators, with a thicknesses range of 3–20 m, are engineered for high-performance EVs, drones and robots. These separators feature superior low-temperature performance, enhanced safety profiles and low interface resistance, making them ideal for advanced battery solutions. For example, our LATP electrolyte membrane demonstrates excellent low-temperature performance, with an improvement of around 8% in low-temperature cycling at –25°C as compared to current lithium-ion battery separators, surpassing that of most separators, which typically exhibit capacity retention losses exceeding 10 to 15% under the same conditions. Our semi-solid-state electrolyte separator products have been designed to c12uu4(a)1(nallo)-858.3(igrlyt)-4-stateLitosi91.94(di

Rule 3.13 of the Listing Rules

Each of the independent non-executive Directors has confirmed (i) his/her independence as regards each of the factors referred to in Rules 3.13(1) to (8) of the Listing Rules, (ii) he/she has no past or present financial or other interest in the business of the Company or its subsidiaries or any connection with any core connected person of our Company under the Listing Rules as at the Latest Practicable Date, and (iii) that there are no other factors that may affect his/her independence at the time of his/her appointments.

SENIOR MANAGEMENT

The senior management is responsible for the day-to-day management of our business. None of the members of senior management are related to our Directors or other members of senior management. The following table sets out the information of members of our senior management.

Name	Age	Position(s)	Date of joining our Group	Date of appointment as Director/ senior management[1]	Roles and responsibilities
Chen Xiufeng ( )	58	Executive Director, chairman of our Board and general manager			

Rule 3.13 of the Listing Rules

Each of the independent non-executive Directors has confirmed (i) his/her independence as regards each of the factors referred to in Rules 3.13(1) to (8) of the Listing Rules, (ii) he/she has no past or present financial or other interest in the business of the Company or its subsidiaries or any connection with any core connected person of our Company under the Listing Rules as at the Latest Practicable Date, and (iii) that there are no other factors that may affect his/her independence at the time of his/her appointments.

SENIOR MANAGEMENT

The senior management is responsible for the day-to-day management of our business. None of the members of senior management are related to our Directors or other members of senior management. The following table sets out the information of members of our senior management.

Name	Age	Position(s)	Date of joining our Group	Date of appointment as Director/ senior management[1]	Roles and responsibilities
Chen Xiufeng ( )	58	Executive Director, chairman of our Board and general manager			

Semi-Solid-State Electrolyte Separator Technology

A semi-solid-state electrolyte separator is an important component in semi-solid-state batteries, acting as an intermediate technology between conventional liquid electrolyte batteries and solid-state batteries. Semi-solid-state electrolyte separators are produced using advanced composite coating and integrated moulding technologies. Composite coating involves applying a semi-solid electrolyte onto a separator substrate to enhance ionic conductivity and stability. Integrated moulding combines fibre frameworks with solid electrolytes, resulting in high strength, high lithium-ion conductivity and low interfacial impedance. Semi-solid-state electrolyte separators are essential for semi-solid-state batteries because they enhance safety by reducing the risk of leaks and fires associated with liquid electrolytes. They also improve energy density, leading to more powerful and longer-lasting batteries. Additionally, these separators offer better ionic conductivity and mechanical strength, which boosts overall battery performance and durability. They are cost-effective, utilising existing lithium-ion battery manufacturing processes, and serve as a crucial bridge between current lithium-ion batteries and future solid-state batteries, facilitating technological advancements.

Our semi-solid-state electrolyte separators, with a thicknesses range of 3–20 m, are engineered for high-performance EVs, drones and robots. These separators feature superior low-temperature performance, enhanced safety profiles and low interface resistance, making them ideal for advanced battery solutions. For example, our LATP electrolyte membrane demonstrates excellent low-temperature performance, with an improvement of around 8% in low-temperature cycling at –25°C as compared to current lithium-ion battery separators, surpassing that of most separators, which typically exhibit capacity retention losses exceeding 10 to 15% under the same conditions. Our semi-solid-state electrolyte separator products have been designed to c12uu4(a)1(nallo)-858.3(igrlyt)-4-stateLitosi91.94(di

Semi-Solid-State Electrolyte Separator Technology

A semi-solid-state electrolyte separator is an important component in semi-solid-state batteries, acting as an intermediate technology between conventional liquid electrolyte batteries and solid-state batteries. Semi-solid-state electrolyte separators are produced using advanced composite coating and integrated moulding technologies. Composite coating involves applying a semi-solid electrolyte onto a separator substrate to enhance ionic conductivity and stability. Integrated moulding combines fibre frameworks with solid electrolytes, resulting in high strength, high lithium-ion conductivity and low interfacial impedance. Semi-solid-state electrolyte separators are essential for semi-solid-state batteries because they enhance safety by reducing the risk of leaks and fires associated with liquid electrolytes. They also improve energy density, leading to more powerful and longer-lasting batteries. Additionally, these separators offer better ionic conductivity and mechanical strength, which boosts overall battery performance and durability. They are cost-effective, utilising existing lithium-ion battery manufacturing processes, and serve as a crucial bridge between current lithium-ion batteries and future solid-state batteries, facilitating technological advancements.

Our semi-solid-state electrolyte separators, with a thicknesses range of 3–20 m, are engineered for high-performance EVs, drones and robots. These separators feature superior low-temperature performance, enhanced safety profiles and low interface resistance, making them ideal for advanced battery solutions. For example, our LATP electrolyte membrane demonstrates excellent low-temperature performance, with an improvement of around 8% in low-temperature cycling at –25°C as compared to current lithium-ion battery separators, surpassing that of most separators, which typically exhibit capacity retention losses exceeding 10 to 15% under the same conditions. Our semi-solid-state electrolyte separator products have been designed to c12uu4(a)1(nallo)-858.3(igrlyt)-4-stateLitosi91.94(di

JOINT COMPANY SECRETARIES

Mr. Li Sheng ( ), aged 40, was appointed as one of our joint company secretaries in June 2025 with effect from the [REDACTED]. For Mr. Li's biography, please see "— Senior Management" of this section.

Ms. Jian Xuegen ( ), aged 39, was appointed as one of our joint company secretaries in June 2025 with effect from the [REDACTED]. Ms. Jian is an assistant vice president of SWCS Corporate Services Group (Hong Kong) Limited.

Ms. Jian obtained her bachelor's degree in accounting from South China University of Technology ( ) in PRC in July 2008. She is a member of the Hong Kong Institute of Certified Public Accountants. She is also a member of the Chinese Institute of Certified Public Accountants.

MANAGEMENT AND CORPORATE GOVERNANCE

Board Committees

Our Board delegates certain responsibilities to various committees. We have established four Board committees, namely the Audit Committee, the Remuneration and Appraisal Committee, the Nomination Committee and the Strategy and Development Management Committee.

Audit Committee

We have established the Audit Committee with written terms of reference in compliance with Rule 3.21 of the Listing Rules and the Corporate Governance Code set out in Appendix C1 to the Listing Rules. The primary duties of the Audit Committee are to review and supervise the financial reporting process and internal controls system of our Group, review connected transactions, and provide advice and comments to the Board. The Audit Committee comprises three members, namely Dr. Lin Zhiwei, Mr. Tang Changjiang, and Mr. Zhu Bide, with Dr. Lin Zhiwei (being an independent non-executive Director with the appropriate professional qualifications as required under Rules 3.10(2) and 3.21 of the Listing Rules) as chairperson of the Audit Committee.

Remuneration and Appraisal Committee

We have established the Remuneration and Appraisal Committee with written terms of reference in compliance with Rule 3.25 of the Listing Rules and the Corporate Governance Code set out in Appendix C1 to the Listing Rules. The primary duties of the Remuneration and Appraisal Committee are to review and make recommendations to the Board on the terms of remuneration packages, bonuses, and other compensation payable to our Directors and other senior management. The Remuneration and Appraisal Committee comprises three members, namely Mr. Tang Changjiang, Dr. Lin Zhiwei, and Mr. Xu Liqiang, with Mr. Tang Changjiang as chairperson of the Remuneration and Appraisal Committee.

disclosing this change and the related share sales until 27 November 2020. The delay occurred partly because Prof. Chen was unaware of the other shareholder's reduction. The Shenzhen CSRC and the Shenzhen Stock Exchange issued a warning, requiring better compliance going forward.

(iv) Failure to properly record insider information access (July 2021) In August 2021, the Company signed a significant sales contract but failed to accurately record all persons with access to insider information due to staff errors. The Shenzhen CSRC issued a warning letter to the Company, Prof. Chen (as Chairman), and the then Board secretary, instructing them to improve internal controls and prevent similar lapses.

Despite these incidents involving Prof. Chen, after conducting a comprehensive assessment (including understanding the nature of the Incident), the Company is of the view that the Decisions did not adversely affect Prof. Chen's suitability to act as an executive Director and chairman of the Board, and Prof. Chen possesses the experience, knowledge, and skills required to serve as a director of a listed company under Listing Rules 3.08 and 3.09, and the Decisions do not have any material adverse effect on the Company's suitability for listing on the Stock Exchange, for the following reason:

(i) according to the PRC Company Law and the rules of the Shenzhen Stock Exchange, the Decisions did not prohibit Prof. Chen from acting as a director or a

relationships, and implementing procedures to identify and record persons with access to inside information. The Company has established a comprehensive information disclosure management systems, including the following:

a. the “Information Disclosure Management Policy”, which stipulates that when shares held by a company shareholder exceeding 5% are pledged, frozen, judicially auctioned, entrusted, placed in trust, or subject to legally restricted voting rights, such shareholder or the actual controller shall immediately notify the company and cooperate in fulfilling information disclosure obligations;

b. the “Connected Transaction Management Policy” to clearly define the scope of connected persons (including connected natural persons, connected legal persons, and potential connected persons). These systems require directors and senior management to promptly declare their connected relationships, strictly regulate the decision-making procedures for connected transactions and the information disclosure process; and

c. the “Insider Information Registration Policy”, which clearly defines the scope of inside information and persons with access to such information. Pursuant such policy, the Company has established procedures for inside

relevant regulatory authorities have not issued any subsequent warnings, sanctions or enforcement actions in relation to the Incidents, and the matters are therefore considered closed.

In light of the above reasons, the Directors are of the view that the Incidents revealed in the Decisions were immaterial and Prof. Chen is suitable to serve as a director of a listed company under Rules 3.08 and 3.09 of the Listing Rules. Based on the independent due

by Directors and their close associates. The Company has established a comprehensive information disclosure management systems, including the following:

The “Insider Information Registration Policy”, which clearly defines the scope of inside information and persons with access to such information. Pursuant such

The flowchart below illustrates the critical role battery separator plays in the entire lithium-ion battery value chain:

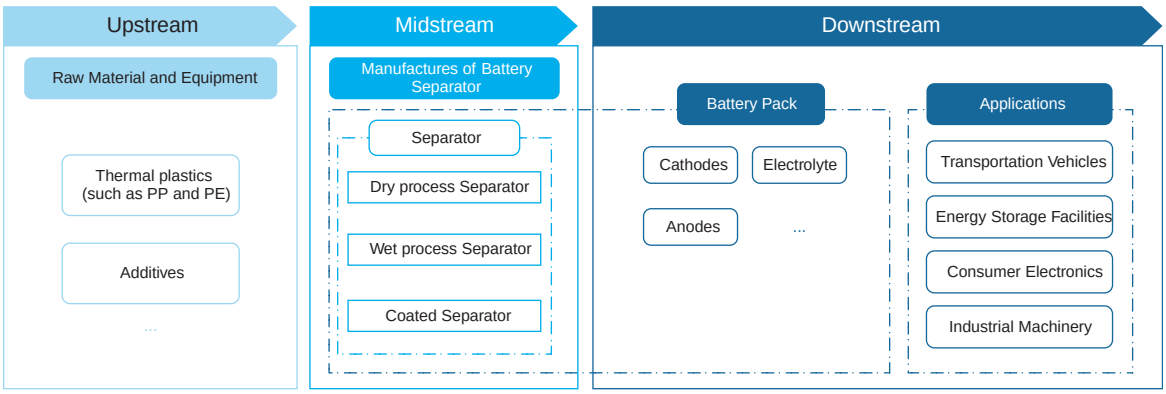

- Upstream: Major upstream suppliers in the battery separator industry encompass raw material suppliers and equipment manufacturers. Raw material suppliers provide materials such as thermal plastics, additives, packaging and auxiliary production materials, while the equipment suppliers provide machineries and tools.

- Midstream: Battery separator manufacturers at the midstream offer dry, wet and coated process separators that are suitable for different applications. The leading battery separator manufacturers that have in-house design capability generally design key production equipment for both dry and wet process separators that is highly compatible with their proprietary production techniques, which will enable them to produce high-quality separators with high level of precision and production efficiency.

- Downstream: The battery separators are applicable to lithium-ion batteries for a wide range of application scenarios, including transportation vehicles, industrial machinery, energy storage facilities and consumer electronics, etc.

We pride ourselves on being a reliable partner to other players in the lithium-ion battery value chain. Given the essential role of battery separators in the lithium-ion battery, the downstream lithium-ion battery manufacturers place great emphasis on the selection of suppliers of separators. As the first Chinese enterprise engaged in the research and manufacturing of lithium-ion battery separators according to Frost and Sullivan, and with more than 20 years of industry experience, we believe we have become a world-leading

The flowchart below illustrates the critical role battery separator plays in the entire lithium-ion battery value chain:

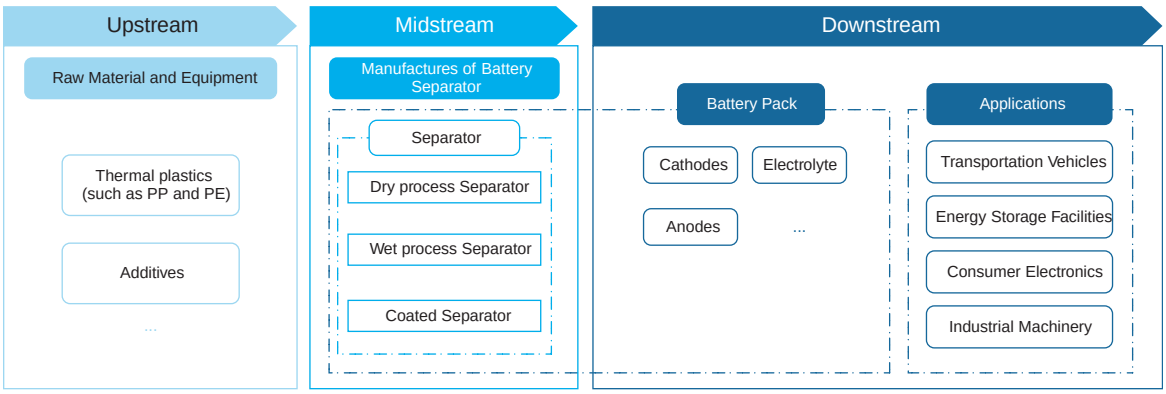

- Upstream: Major upstream suppliers in the battery separator industry encompass raw material suppliers and equipment manufacturers. Raw material suppliers provide materials such as thermal plastics, additives, packaging and auxiliary production materials, while the equipment suppliers provide machineries and tools.

- Midstream: Battery separator manufacturers at the midstream offer dry, wet and coated process separators that are suitable for different applications. The leading battery separator manufacturers that have in-house design capability generally design key production equipment for both dry and wet process separators that is highly compatible with their proprietary production techniques, which will enable them to produce high-quality separators with high level of precision and production efficiency.

- Downstream: The battery separators are applicable to lithium-ion batteries for a wide range of application scenarios, including transportation vehicles, industrial machinery, energy storage facilities and consumer electronics, etc.

We pride ourselves on being a reliable partner to other players in the lithium-ion battery value chain. Given the essential role of battery separators in the lithium-ion battery, the downstream lithium-ion battery manufacturers place great emphasis on the selection of suppliers of separators. As the first Chinese enterprise engaged in the research and manufacturing of lithium-ion battery separators according to Frost and Sullivan, and with more than 20 years of industry experience, we believe we have become a world-leading

OUR PRODUCTS

We are primarily engaged in the R&D, manufacturing and sales of lithium-ion battery separator which is an indispensable and core component of lithium-ion batteries. During the Track Record Period, we offer our customers a comprehensive product portfolio of lithium-ion batteries separators that are designed and manufactured in-house, which primarily include dry process separators, wet process separators and coated separators.

With more than 20 years of specialisation in the lithium-ion battery industry, our team

DIVIDEND POLICY

We have a formal dividend policy. Subject to PRC laws and regulations, including the PRC Company Law ( ) and the No.3 Guideline for the Supervision of Listed Companies — Cash Dividend Distribution of Listed Companies (2025) (3 — 2025), and Articles 168 through 175 of the Articles of Association, in principle, we shall distribute dividends in cash. The profit distributed in cash in any single year shall not be less than 10% of the distributable profit realised for that year. Within any three consecutive years, our distributed cumulative profits in cash shall not be less than 30% of the average distributable profits realised in the latest three years. The specific dividend ratios shall be determined by our Board according to relevant regulations and our operating conditions, and shall be approved at our general meeting.

Any future plan to pay dividends will be made at the discretion of our Board of Directors subject to approval of our Shareholders. Any declaration as well as the amount of such declaration and payment will be subject to our Articles of Association and the relevant laws. Even if we decide to pay dividends, the form, frequency and amount may be based on a number of factors, including our future operations and earnings, capital requirements and surplus, general financial condition, contractual restrictions and other factors that the Board of Directors may deem relevant.

During the Track Record Period, we declared and paid dividends to our Shareholders as follows:

	Year ended 31 December			Nine months ended 30 September	
	2022	2023	2024	2024	2025
	RMB'000	RMB'000	RMB'000	RMB'000 (unaudited)	RMB'000
Final dividends	38,420	127,931	295,382	295,382	66,595

DIVIDEND POLICY

We have a formal dividend policy. Subject to PRC laws and regulations, including the PRC Company Law ( ) and the No.3 Guideline for the Supervision of Listed Companies — Cash Dividend Distribution of Listed Companies (2025) (3 — 2025), and Articles 168 through 175 of the Articles of Association, in principle, we shall distribute dividends in cash. The profit distributed in cash in any single year shall not be less than 10% of the distributable profit realised for that year. Within any three consecutive years, our distributed cumulative profits in cash shall not be less than 30% of the average distributable profits realised in the latest three years. The specific dividend ratios shall be determined by our Board according to relevant regulations and our operating conditions, and shall be approved at our general meeting.

Any future plan to pay dividends will be made at the discretion of our Board of Directors subject to approval of our Shareholders. Any declaration as well as the amount of such declaration and payment will be subject to our Articles of Association and the relevant laws. Even if we decide to pay dividends, the form, frequency and amount may be based on a number of factors, including our future operations and earnings, capital requirements and surplus, general financial condition, contractual restrictions and other factors that the Board of Directors may deem relevant.

During the Track Record Period, we declared and paid dividends to our Shareholders as follows:

	Year ended 31 December			Nine months ended 30 September	
	2022	2023	2024	2024	2025
	RMB'000	RMB'000	RMB'000	RMB'000 (unaudited)	RMB'000
Final dividends	38,420	127,931	295,382	295,382	66,595

DIVIDEND POLICY

We have a formal dividend policy. Subject to PRC laws and regulations, including the PRC Company Law ( ) and the No.3 Guideline for the Supervision of Listed Companies — Cash Dividend Distribution of Listed Companies (2025) (3 — 2025), and Articles 168 through 175 of the Articles of Association, in principle, we shall distribute dividends in cash. The profit distributed in cash in any single year shall not be less than 10% of the distributable profit realised for that year. Within any three consecutive years, our distributed cumulative profits in cash shall not be less than 30% of the average distributable profits realised in the latest three years. The specific dividend ratios shall be determined by our Board according to relevant regulations and our operating conditions, and shall be approved at our general meeting.

Any future plan to pay dividends will be made at the discretion of our Board of Directors subject to approval of our Shareholders. Any declaration as well as the amount of such declaration and payment will be subject to our Articles of Association and the relevant laws. Even if we decide to pay dividends, the form, frequency and amount may be based on a number of factors, including our future operations and earnings, capital requirements and surplus, general financial condition, contractual restrictions and other factors that the Board of Directors may deem relevant.

During the Track Record Period, we declared and paid dividends to our Shareholders as follows:

	Year ended 31 December			Nine months ended 30 September	
	2022	2023	2024	2024	2025
	RMB'000	RMB'000	RMB'000	RMB'000 (unaudited)	RMB'000
Final dividends	38,420	127,931	295,382	295,382	66,595

Semi-Solid-State Electrolyte Separator Technology

A semi-solid-state electrolyte separator is an important component in semi-solid-state batteries, acting as an intermediate technology between conventional liquid electrolyte batteries and solid-state batteries. Semi-solid-state electrolyte separators are produced using advanced composite coating and integrated moulding technologies. Composite coating involves applying a semi-solid electrolyte onto a separator substrate to enhance ionic conductivity and stability. Integrated moulding combines fibre frameworks with solid electrolytes, resulting in high strength, high lithium-ion conductivity and low interfacial impedance. Semi-solid-state electrolyte separators are essential for semi-solid-state batteries because they enhance safety by reducing the risk of leaks and fires associated with liquid electrolytes. They also improve energy density, leading to more powerful and longer-lasting batteries. Additionally, these separators offer better ionic conductivity and mechanical strength, which boosts overall battery performance and durability. They are cost-effective, utilising existing lithium-ion battery manufacturing processes, and serve as a crucial bridge between current lithium-ion batteries and future solid-state batteries, facilitating technological advancements.

Our semi-solid-state electrolyte separators, with a thicknesses range of 3–20 m, are engineered for high-performance EVs, drones and robots. These separators feature superior low-temperature performance, enhanced safety profiles and low interface resistance, making them ideal for advanced battery solutions. For example, our LATP electrolyte membrane demonstrates excellent low-temperature performance, with an improvement of around 8% in low-temperature cycling at –25°C as compared to current lithium-ion battery separators, surpassing that of most separators, which typically exhibit capacity retention losses exceeding 10 to 15% under the same conditions. Our semi-solid-state electrolyte separator products have been designed to c12uu4(a)1(nallo)-858.3(igrlyt)-4-stateLitosi91.94(di

RANKING

Upon the completion of the [REDACTED], our Shares will consist of A Shares and H Shares. A Shares and H Shares are all ordinary Shares in the share capital of our Company and are regarded as the same class of Shares under the Articles of Association.

Apart from certain qualified domestic institutional investors in the PRC, the qualified PRC investors under the Shanghai-Hong Kong Stock Connect or the Shenzhen-Hong Kong Stock Connect and other persons who are entitled to hold our H Shares pursuant to relevant PRC laws and regulations or upon approvals of any competent authorities, H Shares generally cannot be [REDACTED] for by or [REDACTED] between legal or natural persons of the PRC.

A Shares and H Shares shall carry the same rights in all other respects and, in particular, will rank equally for dividends or distributions declared, paid or made. All dividends in respect of our H Shares are to be paid by us in Hong Kong dollars whereas all dividends in respect of our A Shares are to be paid by us in Renminbi. In addition to cash, dividends may also be distributed in the form of Shares. Holders of our H Shares will receive share dividends in the form of H Shares, and holders of our A Shares will receive share dividends in the form of A Shares.

NO CONVERSION OF OUR A SHARES INTO H SHARES FOR [REDACTED] AND [REDACTED] ON THE HONG KONG STOCK EXCHANGE

Our A Shares and our H Shares are generally neither interchangeable nor fungible, and the market prices of our A Shares and our H Shares may be different after the [REDACTED]. The Guidelines on Application for "Full Circulation" of Domestic Unlisted Shares of H-share Companies (H
announced by the CSRC are not applicable to companies dual listed in the PRC and on the Hong Kong Stock Exchange. As at the Latest Practicable Date, there were no relevant rules or guidelines from the CSRC providing that A Shareholders may convert A shares held by them into H shares for [REDACTED] and [REDACTED] on the Hong Kong Stock Exchange.

APPROVAL FROM HOLDERS OF A SHARES REGARDING THE [REDACTED]

Approval from holders of A Shares is required for our Company to issue H Shares and seek the listing of H Shares on the Hong Kong Stock Exchange. Such approval was obtained by us at the shareholders' general meeting of our Company held on 21 May 2025 and is subject to the following major conditions:

(i) Size of the [REDACTED]: The proposed number of H Shares to be [REDACTED] shall not exceed approximately [REDACTED]% of the total issued share capital enlarged by the H Shares to be issued pursuant to the [REDACTED] (before the exercise of the [REDACTED]). The number of H Shares to be issued pursuant to the full exercise of the [REDACTED] shall not exceed [REDACTED]% of the total number of H Shares to be [REDACTED] initially under the [REDACTED].

RANKING

Upon the completion of the [REDACTED], our Shares will consist of A Shares and H Shares. A Shares and H Shares are all ordinary Shares in the share capital of our Company and are regarded as the same class of Shares under the Articles of Association.

Apart from certain qualified domestic institutional investors in the PRC, the qualified PRC investors under the Shanghai-Hong Kong Stock Connect or the Shenzhen-Hong Kong Stock Connect and other persons who are entitled to hold our H Shares pursuant to relevant PRC laws and regulations or upon approvals of any competent authorities, H Shares generally cannot be [REDACTED] for by or [REDACTED] between legal or natural persons of the PRC.

A Shares and H Shares shall carry the same rights in all other respects and, in particular, will rank equally for dividends or distributions declared, paid or made. All dividends in respect of our H Shares are to be paid by us in Hong Kong dollars whereas all dividends in respect of our A Shares are to be paid by us in Renminbi. In addition to cash, dividends may also be distributed in the form of Shares. Holders of our H Shares will receive share dividends in the form of H Shares, and holders of our A Shares will receive share dividends in the form of A Shares.

NO CONVERSION OF OUR A SHARES INTO H SHARES FOR [REDACTED] AND [REDACTED] ON THE HONG KONG STOCK EXCHANGE

Our A Shares and our H Shares are generally neither interchangeable nor fungible, and the market prices of our A Shares and our H Shares may be different after the [REDACTED]. The Guidelines on Application for "Full Circulation" of Domestic Unlisted Shares of H-share Companies (H
announced by the CSRC are not applicable to companies dual listed in the PRC and on the Hong Kong Stock Exchange. As at the Latest Practicable Date, there were no relevant rules or guidelines from the CSRC providing that A Shareholders may convert A shares held by them into H shares for [REDACTED] and [REDACTED] on the Hong Kong Stock Exchange.

APPROVAL FROM HOLDERS OF A SHARES REGARDING THE [REDACTED]

Approval from holders of A Shares is required for our Company to issue H Shares and seek the listing of H Shares on the Hong Kong Stock Exchange. Such approval was obtained by us at the shareholders' general meeting of our Company held on 21 May 2025 and is subject to the following major conditions:

(i) Size of the [REDACTED]: The proposed number of H Shares to be [REDACTED] shall not exceed approximately [REDACTED]% of the total issued share capital enlarged by the H Shares to be issued pursuant to the [REDACTED] (before the exercise of the [REDACTED]). The number of H Shares to be issued pursuant to the full exercise of the [REDACTED] shall not exceed [REDACTED]% of the total number of H Shares to be [REDACTED] initially under the [REDACTED].

RANKING

Upon the completion of the [REDACTED], our Shares will consist of A Shares and H Shares. A Shares and H Shares are all ordinary Shares in the share capital of our Company and are regarded as the same class of Shares under the Articles of Association.

Apart from certain qualified domestic institutional investors in the PRC, the qualified PRC investors under the Shanghai-Hong Kong Stock Connect or the Shenzhen-Hong Kong Stock Connect and other persons who are entitled to hold our H Shares pursuant to relevant PRC laws and regulations or upon approvals of any competent authorities, H Shares generally cannot be [REDACTED] for by or [REDACTED] between legal or natural persons of the PRC.

A Shares and H Shares shall carry the same rights in all other respects and, in particular, will rank equally for dividends or distributions declared, paid or made. All dividends in respect of our H Shares are to be paid by us in Hong Kong dollars whereas all dividends in respect of our A Shares are to be paid by us in Renminbi. In addition to cash, dividends may also be distributed in the form of Shares. Holders of our H Shares will receive share dividends in the form of H Shares, and holders of our A Shares will receive share dividends in the form of A Shares.

NO CONVERSION OF OUR A SHARES INTO H SHARES FOR [REDACTED] AND [REDACTED] ON THE HONG KONG STOCK EXCHANGE

Our A Shares and our H Shares are generally neither interchangeable nor fungible, and the market prices of our A Shares and our H Shares may be different after the [REDACTED]. The Guidelines on Application for "Full Circulation" of Domestic Unlisted Shares of H-share Companies (H
announced by the CSRC are not applicable to companies dual listed in the PRC and on the Hong Kong Stock Exchange. As at the Latest Practicable Date, there were no relevant rules or guidelines from the CSRC providing that A Shareholders may convert A shares held by them into H shares for [REDACTED] and [REDACTED] on the Hong Kong Stock Exchange.

APPROVAL FROM HOLDERS OF A SHARES REGARDING THE [REDACTED]

Approval from holders of A Shares is required for our Company to issue H Shares and seek the listing of H Shares on the Hong Kong Stock Exchange. Such approval was obtained by us at the shareholders' general meeting of our Company held on 21 May 2025 and is subject to the following major conditions:

(i) Size of the [REDACTED]: The proposed number of H Shares to be [REDACTED] shall not exceed approximately [REDACTED]% of the total issued share capital enlarged by the H Shares to be issued pursuant to the [REDACTED] (before the exercise of the [REDACTED]). The number of H Shares to be issued pursuant to the full exercise of the [REDACTED] shall not exceed [REDACTED]% of the total number of H Shares to be [REDACTED] initially under the [REDACTED].

DIRECTORS

Our Board consist of the following Directors. Our Directors serve a term of three years and shall be subject to re-election upon the expiry of their respective term of office.

Name	Age	Position(s)	Date of joining our Group	Date of appointment as Director[1]	Roles and responsibilities
Chen Xiufeng ( )	58	Executive Director, chairman of our Board and general manager	September 2003	September 2008	Responsible for the strategic planning, business direction and daily operation and management of our Group
ZHANG XIAOMIN	57	Executive Director, vice general manager and chief technology officer	January 2017	December 2023	Responsible for the overall management, daily operation, and technologies of our Group
Xu Liqiang ( )	47	Executive Director	May 2021	June 2025	Responsible for the overall management and daily operation of our east China base
Zhu Bide ( )	69	Non-executive Director	November 2021	November 2021	Responsible for providing professional opinion and judgement

The following information set forth does not form part of the "Accountants' Report" from Rongcheng (Hong Kong) CPA Limited, Certified Public Accountants, Hong Kong, the Company's reporting accountants, as set forth in Appendix I to this document, and is included herein for illustrative purpose only. The unaudited [REDACTED] financial information should be read in conjunction with the section headed "Financial Information" in this document and the Accountants' Report set out in Appendix I to this document.

A. UNAUDITED [REDACTED] STATEMENT OF ADJUSTED CONSOLIDATED NET TANGIBLE ASSETS OF THE GROUP ATTRIBUTABLE TO OWNERS OF THE COMPANY

The following unaudited [REDACTED] stAppendix I to this document, and adjusted as describ

Notes:

1. The audited consolidated net tangible assets of the Group attributable to owners of the Company as

B. REPORT ON UNAUDITED [REDACTED] FINANCIAL INFORMATION

The following is the text of the independent reporting accountants' assurance report received from Rongcheng (Hong Kong) CPA Limited, Certified Public Accountants, Hong Kong, the Company's reporting accountants, in respect of the Group's unaudited [REDACTED] financial information for the purpose in this document.

[REDACTED]

[REDACTED]

[REDACTED]

APPENDIX IIB [REDACTED]

[ ]

This appendix contains a summary of the principal provisions of the Articles of Association of the Company adopted on 19 June 2025, which will take effect upon the [REDACTED] of H Shares on the Hong Kong Stock Exchange. The primary purpose of this appendix is to provide potential investors with an overview of the Articles of Association of the Company. Accordingly, it may not contain all the information that may be considered material or relevant by potential investors.

SHARES AND REGISTERED CAPITAL

The issuance of shares by the Company shall follow the principles of openness, fairness, and impartiality. Each share of the same class shall carry equal rights. Shares of the same class issued at the same time shall be issued under the same conditions and at the same price. All entities or individuals subscribing for such shares shall pay the same consideration for each share.

INCREASE, REDUCTION AND REPURCHASE OF SHARE CAPITAL

Increase of Share Capital

The Company may, in accordance with applicable laws and regulations and subject to a resolution adopted by the General Meeting, increase its share capital as required for its business operations and development by one or more of the following means:

(i) issuing shares to unspecified investors;

(ii) issuing shares to specific investors;

(iii) distributing bonus shares to existing shareholders;

(iv) converting capital reserves into share capital; and/or

(v) any other methods permitted by law, administrative regulations, and the rules of the China Securities Regulatory Commission (CSRC).

Reduction of Capital

The Company may reduce its registered capital. Any reduction of registered capital shall be carried out in accordance with the procedures prescribed by the PRC Company Law, other applicable laws and regulations, and the Articles of Association.

The Company shall notify its creditors within ten (10) days from the date on which the resolution for the reduction of registered capital is passed by the General Meeting, and shall make a public announcement within thirty (30) days after the resolution approving the reduction has been adopted. Creditors shall have the right, within thirty (30) days from the date of receipt of the notice or, if no such notice is received, within forty-five (45) days from the date of the public announcement, to require the Company to settle its debts or provide a corresponding guarantee.

Repurchase of Shares

The Company may repurchase its own shares in accordance with applicable laws, administrative regulations, departmental rules and the Articles of Association under any of the following circumstances:

(i) for the purpose of reducing the Company's registered capital;

(ii) in connection with a merge with another company that holds shares in the Company;

(iii) for use in employee stock ownership plans or equity incentive schemes;

(iv) upon request by shareholders who object to resolutions adopted at a general meeting regarding the merger or division of the Company, requiring the Company to repurchase their shares;

(v) for conversion into shares of the Company of convertible corporate bonds issued by the Company; or

(vi) where necessary for the Company to protect its value and the shareholders' equity interest.

The Company shall not engage in the trading of its own shares except in the circumstances set out above.

Where the Company repurchases its own shares pursuant to items (i) and (ii) of paragraph 1, such repurchase shall be subject to a resolution of the general meeting. Where the repurchase is conducted pursuant to items (iii), (v) and (vi) of paragraph 1, it shall be approved by a resolution of the Board of Directors passed at a meeting attended by more than two-thirds (2/3) of the directors.

Where the Company repurchases its own shares in accordance with the provisions of

Directors and senior management personnel shall declare to the Company their shareholdings in the Company and any changes thereto. During their term of office, the annual transfer of their shares of the same class shall not exceed 25% of their total holdings of such class of shares in the Company. The shares held by such persons shall not be transferred within one (1) year from the date on which the Company's shares are listed and traded. Within six (6) months after their resignation, such persons shall not transfer the shares they hold in the Company.

Where laws, administrative regulations or the listing rules of the stock exchange at the place where the Company's shares are listed impose additional restrictions on the transfer of the Company's shares, such provisions shall prevail.

The Company shall not accept its shares as the subject matter of a pledge.

RIGHTS AND OBLIGATIONS OF SHAREHOLDERS

Shareholders

The Company shall establish a register of shareholders based on the records provided by the securities registration and clearing institution. The register of shareholders shall serve as conclusive evidence of shareholders' shareholdings in the Company. Shareholders shall enjoy rights and assume obligations in accordance with the class of shares they hold. Shareholders holding the same class of shares shall be entitled to the same rights and assume the same obligations.

Rights and Obligations of Shareholders

The shareholders of the Company shall be entitled to the following rights:

(i) to receive dividends and other forms of distribution in proportion to their shareholdings;

(ii) to request the convening of, convene, preside over, attend, or appoint proxies to attend shareholders' general meetings and exercise voting rights accordingly;

(iii) to supervise the Company's operations and submit suggestions or inquiries;

(iv) to transfer, donate, or pledge their shares in accordance with laws, administrative regulations, and the Articles of Association;

(v) shareholders shall have the right to inspect and make copies of Articles of Association, the register of shareholders, minutes of general meetings, resolutions of the Board of Directors, and financial accounting reports. Shareholders who meet the prescribed requirements may also inspect the Company's accounting books and accounting vouchers;

(vi) to participate in the distribution of the Company's remaining assets in proportion to their shareholdings upon termination or liquidation of the Company;

(vii) to request the Company to repurchase their shares if they object to resolutions of the shareholders' general meeting regarding mergers or divisions of the Company; and

(viii) other rights provided by laws, administrative regulations, departmental rules, securities regulatory rules at the place where the Company's shares are listed, or the Articles of Association.

Shareholders' requesting to inspect or make copies of relevant documents of the Company shall comply with the PRC Company Law, Securities Law of the People's Republic of China, and other applicable laws, administrative regulations, and securities regulatory rules where the Company's shares are listed.

The shareholders of the Company shall undertake the following obligations:

(i) to comply with laws, administrative regulations, and the Articles of Association;

(ii) to pay subscription monies for the shares they have subscribed for, according to the agreed subscription terms and method;

(iii) not to withdraw their capital contributions except as otherwise permitted by laws or regulations;

(iv) not to abuse shareholder rights to harm interests of the Company or other shareholders; not to abuse the Company's independent legal personality or the limited liability of shareholders to harm the interests of the Company's creditors; and

(v) such other obligations as may be required under laws, administrative and the Articles of Association.

Shareholders who abuse their rights and thereby cause losses to the Company or other shareholders shall be liable for compensation in accordance with the law. Shareholders who abuse the Company's status as an independent legal entity and the limited liability of shareholders to evade debts and thereby materially prejudice the interests of the Company's creditors shall bear joint and several liability for the Company's debts.

SHAREHOLDERS' GENERAL MEETING

General rules of the Shareholders' General Meeting

The Shareholders' General Meeting is the organ of authority of the Company and shall, in accordance with the law, exercise the following powers:

(i) to elect and replace directors who are not employee representatives and determine matters relating to the remuneration of such directors;

(ii) to consider and approve the reports of the Board of Directors;

(iii) to consider and approve the Company's profit distribution plan and plan for making up losses;

(iv) to adopt resolutions on the increase or reduction of the registered capital of the Company;

(v) to adopt resolutions on the issuance of bonds by the Company;

(vi) to adopt resolutions on the merger, division, dissolution, liquidation or change of corporate form of the Company;

(vii) to amend the Articles of Association;

(viii) to determine matters relating to the repurchase of the Company's shares in the circumstances set out in Article 25, paragraph 1, items (i) and (ii) of the Articles of Association;

(ix) to adopt resolutions on the appointment or dismissal of the accounting firm responsible for the audit of the Company;

(x) to consider and approve the guarantees as set out in Article 47 of the Articles of Association;

(xi) to consider and approve any proposed purchase or sale of significant assets by the Company within one (1) year that exceeds thirty percent (30%) of the Company's total audited assets as at the most recent accounting period;

(xii) to consider and approve equity incentive plans and employee stock ownership plans;

(xiii) to consider and approve any proposed changes to the use of proceeds raised from financing activities;

(xiv) to consider and approve transaction-rela

The Audit Committee shall have the right to propose to the Board of Directors to convene an xtraordinary

The notice of a general meeting shall include the following particulars:

(i) the date, venue and duration of the meeting;

(ii) the matters and proposals to be submitted for consideration at the meeting;

(iii) a prominent statement that all shareholders are entitled to attend the general meeting, and may appoint a proxy in writing to attend and vote at the meeting on their behalf, and that such proxy need not be a shareholder of the Company;

(iv) the record date for determining the shareholders entitled to attend the meetings;

(v) the name and telephone number of the permanent contact person for the meeting; and

(vi) the time and procedures for voting by way of online or other means;

Resolutions of the General Meeting

Resolutions of the general meeting shall be classified into ordinary resolutions and special resolutions.

A special resolution shall be passed by more than two-thirds (2/3) of the voting rights represented by shareholders (including proxies) attending the general meeting.

Board of Directors

Directors of the Company shall be natural persons and may include executive directors, non-executive directors, and independent directors, including at least one professional accountant.

The Board of Directors of the Company shall consist of seven (7) directors, including three (3) independent directors and one (1) employee representative director. The Board shall have one (1) Chairman and may have one (1) Vice Chairman.

The Board of Directors shall exercise the following powers in accordance with the law and the provisions of the Articles of Association:

(i) to convene general meetings and report to the general meeting on its work;

(ii) to implement resolutions passed by the general meeting;

(iii) to determine the Company's business plans and investment proposals;

(iv) to formulate the Company's profit distribution plans and plans for making up losses;

(v) to formulate plans for increasing or reducing the registered capital of the Company, and for the issuance of bonds or other securities and listing thereof;

(vi) to formulate significant acquisition, share repurchase, merger, division, dissolution, or change of corporate form proposals of the Company;

(vii) to decide on matters including external investment, acquisition or disposal of assets, asset pledges, external guarantees, entrusted wealth management, connected transactions, and donations to external parties within the scope

(xi) to formulate proposals for amendments to the Articles of Association;

(xii) to manage the Company's information disclosure affairs;

(xiii) to propose to the general meeting the engagement or replacement of the accounting firm responsible for auditing the Company;

(xiv) to hear the general manager's work reports and evaluate the general manager's performance; and

(xv) to exercise other powers as provided by laws, administrative regulations, departmental rules, the securities regulatory rules of the stock exchange where the Company's shares are listed, the Articles of Association, or as authorised by the general meeting.

The chairman of the Board shall exercise the following functions and powers:

(i) to preside over the General Meetings and to convene and preside over meetings of the Board of Directors;

An extraordinary meeting of the Board of Directors shall be convened and presided over by the Chairman within ten (10) days under any of the following circumstances:

The Audit Committee shall be responsible for reviewing the Company's financial information and its disclosure, supervising and assessing internal and external audit activities, and overseeing internal control. The following matters shall be submitted to the Board of Directors for consideration only after receiving the approval of more than half of all members of the Audit Committee:

(i) disclosure of financial information in financial reports and periodic reports, and reports on the evaluation of internal controls;

(ii) engagement or dismissal of the accounting firm responsible for the Company's audit;

(iv) to propose the Company's basic management policies;

(v) to formulate specific rules and regulations of the Company;

(vi) to submit proposals to the Board of Directors regarding the appointment or dismissal of the Deputy General Managers and financial controller (the chief financial officer);

(vii) to decide on the appointment or dismissal of managerial personnel other than those whose appointment or dismissal shall be determined by the Board of Directors;

(viii) to propose the remuneration, welfar

FINANCIAL AND ACCOUNTING SYSTEM

The Company shall formulate its financial and accounting systems in accordance with applicable laws, administrative regulations, and the requirements of relevant state authorities.

The Company shall submit and disclose its annual reports to the local office of the CSRC and the stock exchange within four (4) months after the end of each fiscal year. The

DISSOLUTION AND LIQUIDATION OF THE COMPANY

The Company may be dissolved for any of the following reasons:

(i) the expiry of the business term specified in the Articles of Association or the occurrence of any other dissolution event as stipulated therein;

(ii) a resolution on dissolution adopted by the General Meeting;

(iii) dissolution required due to merger or division of the Company;

Upon acceptance of the bankruptcy application by the Court, the liquidation committee shall transfer the liquidation matters to the bankruptcy administrator appointed by the Court.

Upon completion of the liquidation, the liquidation committee shall prepare a liquidation report for confirmation by the General Meeting or the Court and submit it to the Company's registration authority to apply for deregistration.

AMENDMENTS TO THE ARTICLES OF ASSOCIATION